HIGH PRESSURE AQUEOUS PARTS WASHER

PBC57A

PBC55-1 Parts Basket





PBC57A

INTRODUCTION

Automatically cleans engine blocks, cylinder heads, transmission cases and small parts using a pressurized heated biodegradable soap solution. Features a large turntable that rotates and uses eighteen spray nozzles for complete cleaning; turntable also pulls out 24" for part loading. Features integral oil skimmer and screen filter to keep contaminates separate from cleaning solution. Includes a 25 gallon pail of YADW896B powdered soap.

TABLE OF CONTENTS

Introduction ..... **Front Cover**

Table of Contents 1

Safety Information 2-3

Description of Equipment..... 4

Features 5

Specifications 6

Assembling the Unit/Start-up Guide..... 7-8

Maintenance..... 9

Replacement Parts 10

Warranty Information 11

Return Warranty Form..... 12

SAFETY INFORMATION

MUST READ INSTRUCTIONS BEFORE USE



READ

Read, understand and follow all safety messages and instructions in this manual. Safety messages in this section of the manual contain a signal word with a three-part message and, in some instances, an icon.

The signal word indicates the level of the hazard in a situation.



DANGER

Indicates an imminently hazardous situation, which,

If not avoided will result in death or serious injury to the operator or bystanders.



WARNING

Indicates a potentially hazardous situation, which,

If not avoided, could result in death or serious injury to the operator or bystanders**.**



CAUTION

Indicates a potentially hazardous situation, which, if not avoided, may result in moderate or minor injury to the operator or bystanders**.**

IMPORTANT

Indicates a situation, which, if not avoided, may result in damage to the parts cleaning equipment.

Safety messages in this section contain three different type styles.

- Normal type states the hazard.
- **Bold** type states how to avoid the hazard.
- *Italic* type states the possible consequences of not avoiding the hazard.

An icon, when present, gives a graphical description of the potential hazard.

MUST READ INSTRUCTIONS **GENERAL SAFETY INFORMATION**
WARNING: This is a heated, high temperature pressure washing machine. Never use solvents, chlorinated cleaners, acids, gasoline or any combustible materials or cleaning fluids**. Use only Snap-on** recommended cleaner YAD**W896B.**



WARNING

Follow all safety codes, as well as the Occupational Safety and Health act (OSHA). For operator safety, stand on a dry surface when operating your pressure wash cabinet. DO NOT STAND ON

A WET SURFACE TO OPERATE MACHINE!

Make sure that an adequate power source is available, 230 volt A.C. 60 AMP. The manufacturer recommends any new service or installation be provided by a licensed professional electrician. Make sure to use a grounded power interrupter.

SAFETY INFORMATION CONT'D



PROTECTIVE GEAR

Always wear a face shield and hand protection while handling commercial cleaner.



READ

Read entire assembly, set-up, operation and service before putting equipment into service.

Read all safety and warning labels on the machine exterior before beginning operation.



CAUTION

Do not add cleaner to boiling water.

Keep the area around the machine clean and dry for operator safety and comfort. If a spill occurs, it should be cleaned up immediately to prevent accidental falls.

Do not attempt to modify this equipment, or to circumvent safety features.

Altering equipment will effectively invalidate the warranty and could cause serious operator injury

.

SAVE THESE INSTRUCTIONS

DESCRIPTION OF EQUIPMENT

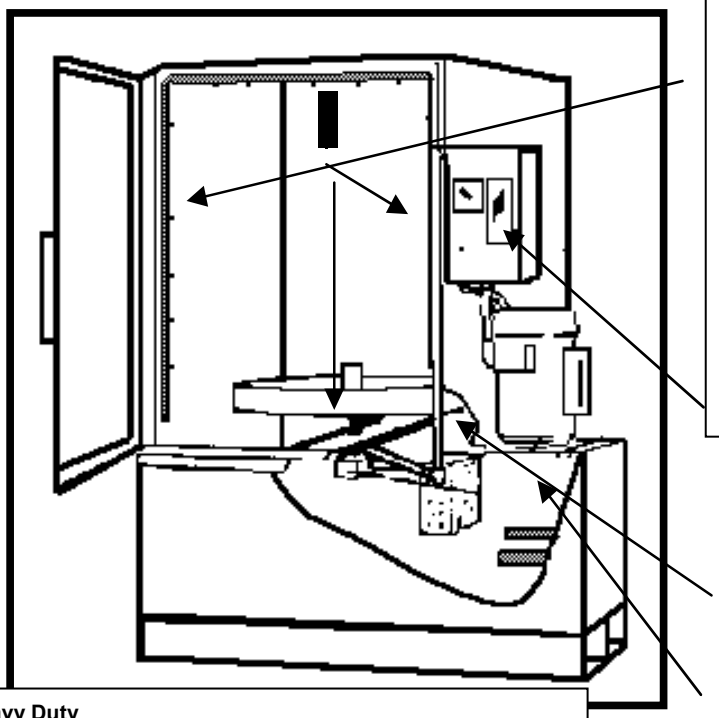

ACCESSORIES

PBC55-1

Snap-On's PBC55-1 Small Parts Basket Comes with a lid that will contain small parts while being deep cleaned by your Snap-on Model PBC56A.

PBC55-3

Snap-On's PBC55-3 Parts Tree
For Hanging parts while being deep cleaned.

Heavy Duty
Turntable motor drives turntable. # 40 size chain drive.

Rugged Construction
The PBC57A is constructed of 12 gauge steel and all seams are solid welded. Finished with a durable powder coat paint to withstand extremes of temperature and moisture.

The PBC57A is an automatic parts cleaning system. It will clean blocks, heads, transmission cases, small parts, etc. automatically. Set the 0-60 minute timer, and complete other tasks while the PBC57A thoroughly cleans your parts.

The turntable revolves at three rpm, while 18 spray nozzles direct 55 gpm of heated solution at 55 psi to cover all areas of the parts to be cleaned. The turntable pulls out 18" to allow easy loading and unloading of parts to be cleaned. The turntable jog switch allows operator to rotate turntable with door open. Removable filter with handleTwo 4500 watt heater elements CSA MODEL HAS 2 3500 WATT. DVD available upon request.

Specifications	
Cabinet construction	12 gauge steel
Electrical	220 volt, single phase,50/60hz. 60 amp breaker needed for proper operation. Six gauge wire must be used for power supply.
Reservoir Capacity	60 Gallons
Filter Area	200 Square Inches
Heaters	9000 Watts C.S.A. 7,000 WATTS
Dimensions	
	PBC57A
Outside	51"w x 43"d x 70" high
Working Dimensions	35" x 35" x 41" high
Turntable Capacity	500 lbs.
Turntable Diameter	30 Inches
Turntable speed	3 RPM
PUMP	
Type	Sealless
Output	45 psi at 50 Gallons Per Minute

41 " Work Area

70" Overall Height

FEATURES

Cleans engine blocks, cylinder heads, transmission cases and small parts

AUTOMATIC OPERATION

- Parts are cleaned automatically by a high pressure, 55 PSI heated soap solution that sprays from each of the 18 high pressure nozzles.
- Cycle time control is selectable from 0-60 minutes.

TURNTABLE

- Turntable rotates at 3 RPM and pulls out of cabinet to 18" for ease of part loading.
- Driven by a #40 chain for positive rotation without slippage.
- Sprocket drive assembly has sealed bearing shafts for longevity.

SOAP SOLUTION

- Includes 25 lbs. of biodegradable soap concentrate.
- Integral oil skimmer removes oil and grease and helps maintain cleaning effectiveness.
-

RUGGED CONSTRUCTION

- Made with solid welded seams and 12 gauge steel construction.
- Also features capacity of up to 500 lbs and inside working dimensions of 35"W x 35"D x 41"H.

Your Snap-on transmission cleaner is an enclosed high pressure washing cabinet. This product is manufactured for use with a heated biodegradable cleaner. The washing action of the cleaner is designed for removing sludge, grease build-up and grime from transmission cases, engine blocks and other large pieces. Stationary nozzles are positioned to soak and clean objects most effectively. A manual cycle is offered to pre-heat the 60 gallon reservoir. An automatic cycle operates the fluid pump and turntable drive motor through timer control. The heaters operate under thermostatic control. This system is designed and built with operator safety in mind, and years of trouble-free use. Applications include automotive repair, collision repair, motorsports, manufacturing, marine, aviation, agriculture and metal fabrication shops, Industrial trade and technical schools, and many more.

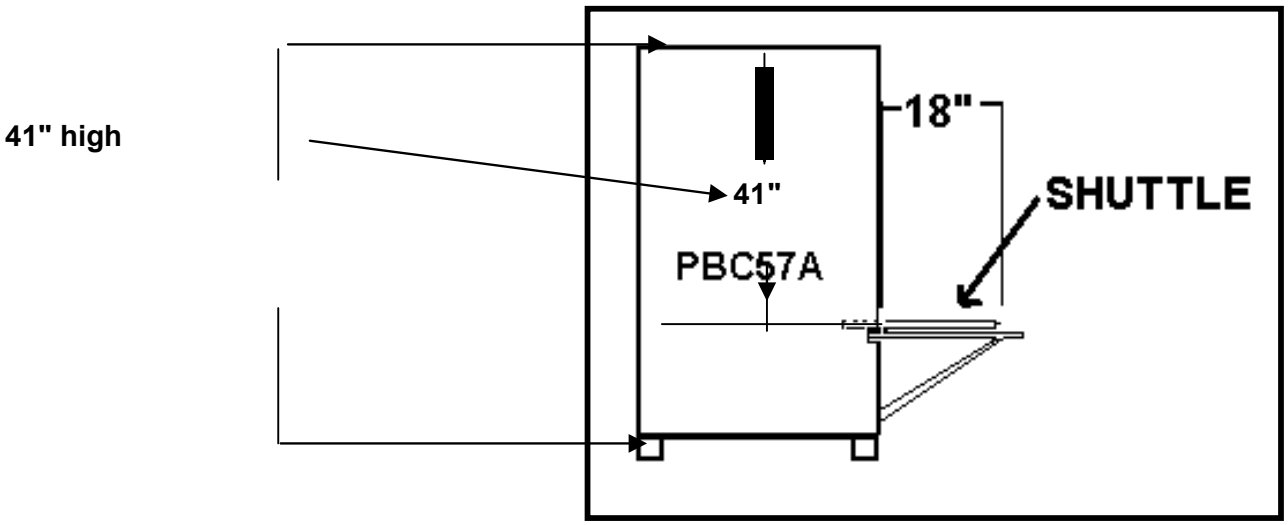

SPECIFICATONS

Stock #	PBC57A
Name	*Parts Washer, Aqueous, Electric, Automatic Cabinet*
Brand	Snap-on
Country Of Origin	USA
Overall Dimensions, inches	69H x 53W x 43D
Power Source	Electrical
Pump Motor, hp	2
Electrical Req.	230VAC, 60Hz (min 60A service)
European Models (230VAC, 50Hz)	PBCH57EUR
Heater, watts	9,000
Inside Dimensions, inches	41H x 35W x 35D
Reservoir Capacity, gal	60
Style	Cabinet-Automatic
Timer	Up to 60 minutes
Turntable Capacity, lb.	500
Turntable Diameter, inches	30
Turntable Speed, RPM	3

ASSEMBLING THE UNIT/START UP GUIDE

WARNING

The Manufacturer strongly recommends using Snap-on YADW896B biodegradable degreasing soap with your PBC57A. Failure to do so may result in the machine rusting on the inside. This is not covered under warranty. The YADW896B has a rust inhibitor that will prevent rusting if used according to the instructions. There is enough YADW896B soap sent with the machine for a strong initial charge.

Install cabinet within 6 feet of electrical service

Use a minimum of 8 gauge wire for electrical hook-up. Use 6 gauge wire if machine is over 6 feet but less than 12 foot from electrical source.

230 Volt AC, 60 amp single phase service is required.

Unit must have 60 gallons of water and have no less than 6 pounds of soap before turning on. Operation without water will result in the breaker tripping and can burn both of the heater elements.

Check door seal and latch-make sure door closes and latches securely.

Make sure all electrical lines are intact.

Visually check pump motor, turntable drive motor, heater and detergent reservoir for possible shipment damage.

INSTALLATION

1. 48" X 42" Floor space required.

2. Water supply readily available for charging machine.

3, Install cabinet on a level floor within 6 feet of a 230 volt A.C. 60 AMP single phase service. The transmission cleaner requires 230 volt, 60 AMP. A power interrupter is required for safe operation.

4. Do not plug in, until all other procedures have been completed.

5. Fill unit (reservoir) with 60 gallons of water. (11" from bottom) for best results.

6. Add soap to 60 gallons of water. For mild cleaning add 6 lbs. for moderate 15 lbs. and for maximum degreasing add entire 25 lb. pail.

7. Make sure that the main safety switch, panel switch, timer and start switches are in the off position.

8. Connect both ends of power interrupter together.

9. Turn on main safety switch.

10. Turn heater switch to "on" position. This will activate your 9000-watt heater. PLEASE NOTE: **DO NOT POWER UP UNIT UNLESS 60 GALLONS OF WATER ARE IN THE FLUID RESERVOIR.** Heater will short out and will shorten life of element.

11. After about 60 minutes your heater will be cycled off by the thermostat. Unit is now ready for effective use.

12. Open door by pulling on latch handles until door is released, and then pull open door. Place parts(s) to be cleaned on turntable. If turntable was pulled out to place parts on, return to original position inside cabinet. Close door and secure both latches.

WARNING: Never attempt to override door safety switch. Inadvertent machine operation can result.

13. Position the timer knob to the desired setting. (The timer control must always be turned past 10 then set to desired time)

14. To begin wash cycle turn pump switch to "on" position. Pump motor and turntable drive motor will activate. Heaters will continue to operate under thermostatic control.

15. When the timed cycle is complete, allow exposed door channel to empty completely back into the reservoir. Use caution when opening door, not to release steam too quickly.

WARNING:
STEAM MAY CAUSE SEVERE BURNS TO EXPOSED SKIN.

ASSEMBLING THE UNIT/ STARTUP GUIDE CONT.

SKIMMER

The oil skimmer on the rear of the unit is designed to remove oil from the surface of the water in reservoir. For best results allow skimmer to run each day while the unit is heating up. Once the unit reaches temperature and you begin using, the skimmer should be turned off.

SERVICING



DANGER

Disconnect power from unit before servicing.

As a last step each day, remove the pump filter located on the lower right front inside the reservoir. Wash out any debris and replace. Filter is removed by pulling up on filter handle.

Purge fluid reservoir when solution has lost cleaning power or there is a sludge build-up in reservoir. Dispose of sludge and old fluid according to Local, State, and Federal guidelines.

Inspect heaters for any damage.

USE OF CLEANER

Model PBC57A is designed to be used with water based cleaner part number W896. 25 pounds is included with the unit.

OBSERVE THE FOLLOWING CAUTIONS WHEN WORKING WITH CLEANERS OF THIS NATURE.





PROTECTIVE GEAR

Always wear hand and full face protection while working with cleaner.



WARNING

Protect skin areas from exposure. Contact with skin or eyes will result in burns.
In case of skin or eye contact - Flush immediately with water, affected areas. Continue flushing eyes for at least 15 minutes. **Contact a doctor at once.**



CAUTION

Do not add cleaner to boiling water. This will cause a violent reaction and can be dangerous.



CAUTION

Do not add lumpy cleaner to water. This can cause harmful spattering.



WARNING

Keep away from children.

Store cleaner in a cool dry place.

Maintenance



DANGER

Disconnect power from unit before servicing.

As a last step each day, remove the pump filter located on the lower right front inside the reservoir. Wash out any debris and replace. Filter is removed by pulling up on filter handle.

Purge fluid reservoir when solution has lost cleaning power or there is a sludge build-up in reservoir. Dispose of sludge and old fluid according to Local, State, and Federal guidelines.

Inspect heaters for any damage.

USE OF CLEANER

Model PBC57A is designed to be used with water based cleaner part number YADW896B. 25 pounds is included with the unit.

OBSERVE THE FOLLOWING CAUTIONS WHEN WORKING WITH CLEANERS OF THIS NATURE.

The model PBC57A's are cleaned before paint is applied. The nature of the strong degreasing and cleaning solutions will get under paint where it is scratched or chipped. Areas of this machine are consistently exposed to the cleaning solutions and the paint may come off through normal use. Although oxidation may occur, anti-rust agents in the cleaning concentrates will prevent rusting. A normal or reasonable amount these areas from of paint loss on these heated pressure washing machines is not covered under the manufacturer warranty.

TECHNICAL SUPPORT AND SERVICE

269-428-2400

REPLACEMENT PARTS

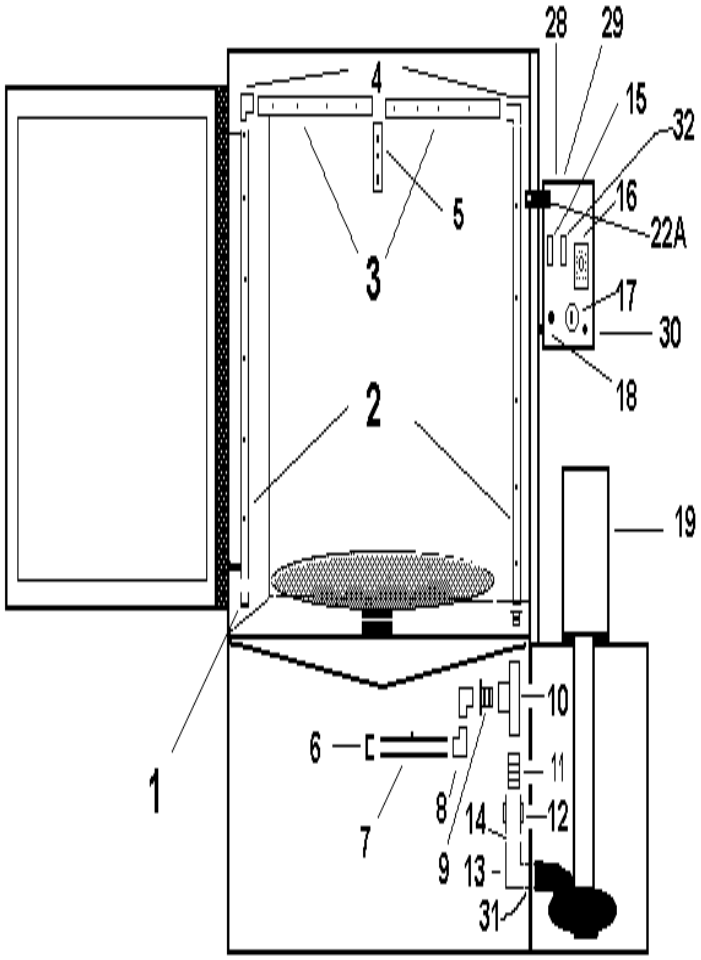

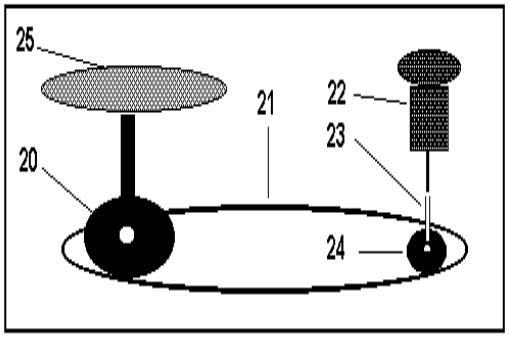

REF #	DESCRIPTION	PART #
1	1" CAP	YAD1724
2	45" NIPPLE	YAD1710
3	13.75" NIPPLE	YAD1728
4	90 DEG. ELBOW	YAD1769
5	19" NIPPLE	YAD1722
6	¾" CAP	YAD1758
7	SPRAY NOZZLE	YAD1716
8	90 DEG. ELBOW	YAD247
9	BUSHING	YAD1729
10	1.5" REDUCER TEE	YAD1765
11	1.5" NIPPLE X CLOSE	YAD1620
12	1.5" UNION	YAD1763
13	1.5" ELBOW	YAD1727
14	1.5" CLOSE NIPPLE	YAD1620
15	HEATER SWITCH	YAD1855
16	TIMER	YADW853
17	JOG SWITCH	YAD1778
18	BREAKER	YADV737
19	PUMP / MOTOR	YAD17063
20	TURNTABLE Sprocket	PBC5711
21	TURNTABLE CHAIN	PBC5713
22	T.T. MOTOR	YAD1702
22A	DOOR SAFETY SWITCH	YAD739
23	SHAFT EXT	PBC5710
24	T.T. MOTOR Sprocket	PBC5712
25	T.T. SHUTTLE WHEEL	PBC5704
26	T.T. BEARING	PBC3602
27	T.T. BEARING PLATE	YAD684
28	T.T. CAPACITOR	YAD1703
29	CAPACITOR STRAP	YAD1703-1
30	T.T. FUSE	YAD1698
31	1-1/2 X 3" NIPPLE	YAD1647
32	PUMP SWITCH	YAD1856

WARRANTY

Manufacturer warrants the Sandblasting Equipment, Parts Washing Equipment and Accessories to be free from defects in materials and workmanship for a period of 1 year from the date of shipment to the buyer, under normal use, maintenance and service as specified in the foregoing Operator's Manual. Manufacturer's liability is limited to repair or replacement, at its option, of the equipment or any of its component parts, which Manufacturer has determined to be defective. Upon written request, Manufacturer shall, at its option, correct any defect by suitable repair, or furnish a replacement part

F.O.B. point of shipment, provided buyer has stored, installed, maintained and operated such equipment in accordance with good industry practices and it has complied with specific recommendations of Manufacturer. Manufacturer shall not be liable for any repairs, replacements, modifications or adjustments to the Equipment or any of its component parts, or any costs of labor performed by buyer or others without Manufacturer prior consent written approval. Buyer accepts all responsibility for compliance with any/all local, state and/or federal laws or regulations including regulations of foreign governments.

This Limited warranty shall not apply and Manufacturer shall be neither responsible nor liable for:

A. Incidental damages, consequential damages, collateral losses, special losses, or fees of any nature including attorney's fees and legal expenses;

B. Equipment conditions caused by abnormal conditions of use, accident, neglect or misuse of equipment, improper storage or damages resulting during shipment as determined by Manufacturer;

C. The effects of corrosion, erosion, and normal wear and tear;

D. Deviation from the Equipment Operator's Manual, prescribed maintenance program, replacement parts, specifications or other terms of sale;

E. labor charges, loss or damage resulting from improper operation, maintenance or repairs made by person(s) other than manufacturer-authorized service representatives; and/or

F. Improper use or application of the Equipment.

G. No warranty express or implied, including the warranty set forth herein, shall apply to Equipment wear items.

In no event shall Manufacturer be liable for claims or damages in excess of the Equipment purchase price, whether as a result of a breach of contract, warning claim, or negligence.

The above warranties are given in lieu of all other warranties, express or implied, including without limitation the warranty of merchantability or suitability and fitness for a particular purpose which warranties are expressly disclaimed. Buyer's remedy shall be limited to repair or replacement (at manufacturer's option) of the Equipment and/or its component parts as described above; no labor or freight allowance is implied. Manufacturer assumes no liability for incidental or consequential damages, even if informed of the possibility of such damages, arising out of the use or any defective nature of the Equipment.

Return Warranty Card

We warrant your unit to be free of defects in material or workmanship for one year from purchase date. We also warrant the unit to be merchantable and suitable for its stated purpose. See back of owners' manual for complete warranty.
This warranty is limited solely to the above and applied only for the period set forth. We will not be liable for any loss, damage, incidental or consequential damages of any kind, whether based upon warranty, contract, or negligence, arising in connection with the sale, use, or repair of the product. Maximum liability shall not in any case exceed the sales price.
For warranty service, contact the distributor who sold the unit to your company.

RETURN THIS WARRANTY FORM WITHIN 30 DAYS OF PURCHASE

DATE PURCHASED:

MODEL: SERIAL # PUMP SERIAL #

PURCHASED FROM: CITY:

YOUR COMPANY NAME:

ADDRESS:

MACHINE TO BE USED FOR:

APPROX. USE: (hours per day)

REASONS FOR PURCHASING EQUIPMENT OTHER THAN DIFFERENT MAKE:

Size:

Features:

Price:

Other: (please explain)

Return This Form to:

Regal Dee-Blast LLC

P.O. Box 983

Coloma, MI 49038

(269) 428-2400