DIAGNOSTIC LEAK DETECTOR

EELD700A



INTRODUCTION

This EELD700A Diagnostic Leak Detector easily finds leaks in fuel vapor recovery (EVAP) systems, vacuum / induction, exhaust systems, as well as pinpoint wind and water leaks. To locate a leak; you simply introduce the smoke vapor into the system to be tested and shine the inspection light supplied to look for the vapor, pinpointing the location of a leak. Simple to set up and perform quick diagnostics on air leaks.

TECHNICAL SUPPORT AND SERVICE

USA AND CANADA: 877-587-2151

TABLE OF CONTENTS

Introduction . . . . . Front Cover

Table of Contents 1

Safety Information 2

Specifications 3

Features 4

Start-up Guide 5

Operation 6-7

Maintenance 8

Troubleshooting 9

Parts List 10-12

Notes 13

Warranty / Service and Repair . . . . . Back Cover

SAFETY INFORMATION

SAVE THESE INSTRUCTIONS

⚠WARNING



- Improper use can cause hazardous conditions.

Read and follow all safety precautions accompanying the product. Do not touch hot exhaust systems, manifolds, engines, radiators, or other hot parts. Always disconnect the ground lead before disconnecting the live (positive) lead. Disconnect from the vehicle when not performing tests.

Unexpected electrical, thermal, or mechanical occurrences can cause injury.



- Use of diagnostic equipment on rotating engine poses risk of flying particles and entanglement.

Wear safety goggles. Use caution in routing cables. Do not place test equipment or tools on fenders or other places in the engine compartment. Flying particles can cause injury.



Poorly routed cables and test leads can cause entanglement and injury.

- Use of diagnostic equipment can cause electrical shock, fire and explosion. Gasoline, methanol, and oxygenated fuels are toxic and flammable.



Use caution and proper procedures when connecting and disconnecting leads. Diagnostic equipment must be located 18" or more above floor level. Avoid sparks and other sources of ignition. Do not spray equipment or vehicle with combustible solvents such as carburetor sprays or fuel injector cleaners while performing leak checks. Use the Smoke Machine with the vehicle turned off.

Electrical shock, flames, and explosion can cause serious injury.



- Use of improper smoke solutions, incorrect air supply, and accessories can cause fire, injury, and equipment damage.

Only use the approved smoke solution available from Snap-on. Air supply must be an inert gas such as Nitrogen, CO2, or Argon. Use only the manufacturer's recommended attachments from Snap-on. Follow the instructions is the owner's manual.



Incorrect smoke solution can injure the user and damage the equipment. Using compressed air can potentially mix with fuel vapors and cause a fire.



WARNING: This product can expose you to chemicals including arsenic, which is known to the State of California to cause cancer. For more information go to www.P65Warnings.ca.gov.

SPECIFICATIONS

Specifications	
L x W x H	12 in. x 13 in. x 14 in. (30.5 cm x 33 cm x 35.5 cm)
Weight	10.6 lbs. (4.8 kg)
Shipping Weight	16.3 lbs. (7.4 kg)
Power Supply	12 Volts DC
Power Consumption	12A MAX
Output Pressure	0.5 PSI / 13.0 in. H_20 / 0.032 BAR
Operating Temperature	32°F-122°F (0°C-50°C)
Operating Humidity	No Restrictions
Operating Altitude	No Restrictions
Vapor Output Hose	10 ft. (3.1 m)
Power Supply Cables	10 ft. (3.1 m)
Operating Modes	Vapor Cycle / Air Only Cycle
Pressure Supply	Compressed Air or Inert Gas

FEATURES

EELD700A: Used by technicians & leading OEMs worldwide.

EELD700A: Diagnostic Leak Detector is the most useful, yet simple to operate, leak tester available today. The technology inside this Leak Detector was developed in collaboration with major automakers (OEMs) to specified standards and designed to be safe to use in any vehicle. It is the smoke technology mandated by OEMs and it can be found inside 100% of the smoke machines approved and mandated by the OEMs for their dealers, worldwide.

EELD700A gives technicians quality and legendary customer service. Product support and Tech support are just a phone call away. Easy-to-see visible vapor is approved by the world's largest OEMs. Safe for the vehicle, the technician, and the environment.

KEY FEATURES

- Full-featured for EVAP diagnostics
- High-visibility lighted flowmeter
- Rechargeable LED inspection light with UV
- Determines leaks down to 0.010”
- Field-replaceable smoke hose
- Heavy-duty flow control valve
- Full-featured accessory kit included
- Detachable power cord
- Ergonomically designed chassis
- Illuminated touch pad switches
- Designed and built to exceed OEM standards
- Built-in cable and hose reel

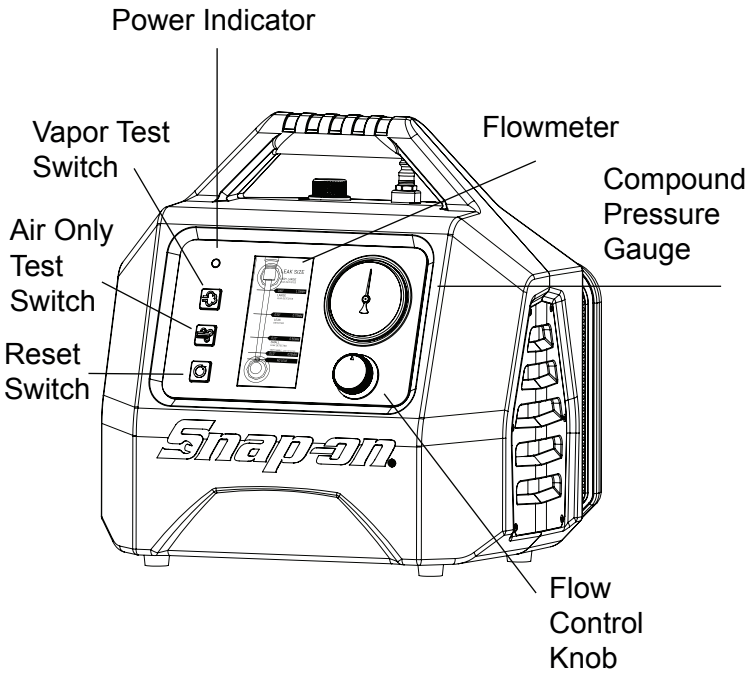

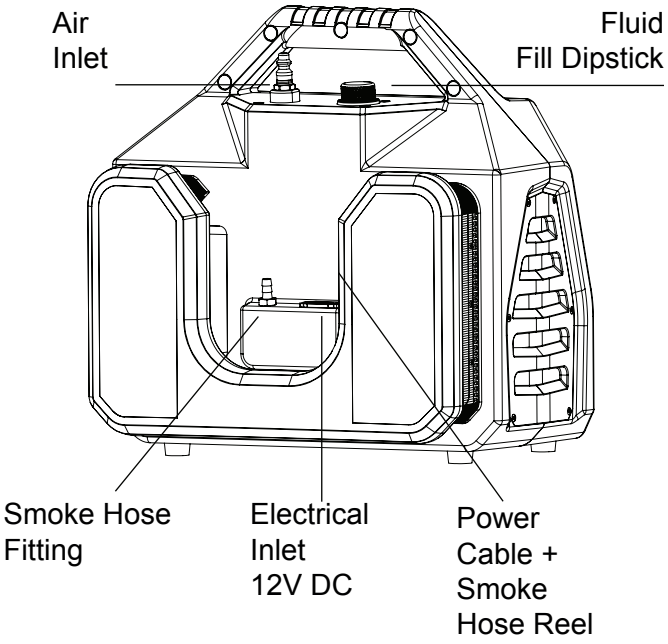

START-UP GUIDE

SET UP

Fill / Add Vapor Producing Fluid.

Remove fluid fill dipstick. Pour smoke producing fluid into fluid fill port until fluid level is near top of the fill line on the dipstick. Replace fluid fill dipstick.

DO NOT OVERFILL:

1. First time fill requires MAX. 2 oz (60 ml). Check fluid level every 50-100 tests.
2. Some OEM's recommend avoiding the use of dyes in intake and exhaust systems, always check automakers recommendations before use.
3. Fill fluid to maximum fill line on dipstick. *** Overfill Can Cause Internal Damage.**

CONNECT TO POWER:

1. This machine runs on a fully-charged 12-Volt battery. Connect red lead (+) to battery's positive terminal. Connect black lead (-) to chassis ground.
2. Do not connect to battery charger or jumper box.
3. Max voltage 12V DC.

POWER INDICATOR:

1. Green Light: Machine has adequate power.
2. No Light: No power, see troubleshooting section.

CONNECT TO AIR SUPPLY:

1. Connect air input hose to a compressed air supply.
2. If necessary, replace air fitting to match your air supply.
3. Max inlet pressure 150 PSI.

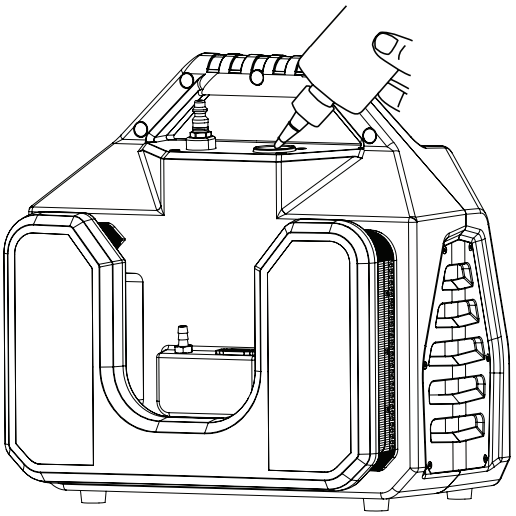

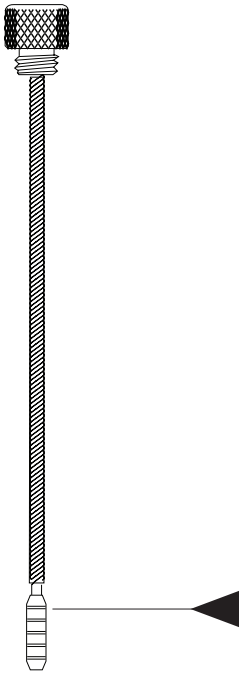

Max Fill Line
*** Overfill Can Cause Internal Damage.**
*** Requires MAX. 2 oz (60 ml).**

OPERATION

TESTING FOR LEAKS

PUSH "Vapor Test" SWITCH:

1. Begins 5-minute vapor cycle.

VAPOR INDICATOR:

2. Red Light: Vapor is generating.
3. Flashing Red Light: Open circuit,
   *See Troubleshooting Section.
4. No Red Light: No vapor generating.
5. Turn flow control knob to release vapor / pressure.
6. Flowmeter indicates flow and measures leak size.
7. Use provided inspection light to locate leaks. Perform repair(s) as needed.

VERIFY REPAIRS

PERFORM DECAY / LEAK DOWN TEST:

1. Pressurize the sealed system. Lock out system by turning flow control knob to the fully closed position.

OBSERVE PRESSURE GAUGE FOR DECAY:

1. Pressure holds: No leaks, repair is complete.
2. Pressure decreases: (gauge pointer at 0) Leak(s) exist, repeat steps 6 & 7 until all repairs are complete.
3. Not all systems are designed to be 100% sealed.

HOW TO DIAGNOSE INTAKE SYSTEM & VACUUM LEAKS

1. This procedure will locate leaks in vacuum lines as well as manifolds, EGR valves, oil seals, gaskets, solenoids, o-rings, ducting, throttle shafts, diaphragms, canisters, and more. For best results, test in a draft-free area.
2. Remove the air filter housing from ducting.
3. If the vehicle has a round inlet tube from the air filter, install the Expandable Bladder
4. Put vapor supply hose into adaptor to introduce vapor into the system.
5. Use provided inspection light to locate leaks.

ALTERNATIVE METHOD

1. Select an appropriate vacuum line to access the vacuum system (i.e., a brake booster supply line before the check valve).
2. Seal all system openings: Air Intake must be sealed to prevent vapor from leaking back through. To seal the intake, use cap plugs, a latex glove, or plastic wrap around the filter.
3. Put vapor output hose into adaptor to introduce vapor into the system.
4. Put vapor supply hose into adaptor to introduce vapor into the system.
5. Use provided inspection light to locate leaks.

HOW TO DIAGNOSE EVAP LEAKS

Leaks in the EVAP system, or fuel vapor recovery system, are frequently the cause of check engine lights. Using a diagnostic leak detector, these leaks can be quickly diagnosed and repaired, making them profitable services for repair facilities.

PRESSURE DECAY / LEAK DOWN TEST

1. Verify if a leak is currently present, test the EVAP system using the decay, or leak down testing method with air only. Use EVAP Quick Connect Kit to access system EVAP system.

2. Using a scan tool, close the vent solenoid to close EVAP system from atmosphere (If vent solenoid does not close, intermittent solenoid may have failed).
3. Lock out system by turning the flow control knob to the fully closed position. Observe pressure gauge for decay.
4. If no leaks are present, system will hold pressure. If pressure decays or leaks down, leaks exist. Proceed to step 2 to find leaks.
5. To find leaks, push ON / OFF button to begin 5 minute vapor cycle.
6. Remove the fuel cap.
7. Open flow control valve to input vapor into the system through adaptor.
8. Replace fuel cap when dense vapor is seen exiting the filler neck.
9. Continue pumping vapor into the system.
10. Using the provided inspection light, inspect for leaks (under the hood and tracing the route of the EVAP system on the underside of the vehicle).
11. Repair the system as needed.
12. Repeat procedures in steps above until all repairs are complete and final quality test is performed, indicating no leaks.

HOW TO DIAGNOSE EXHAUST LEAKS

This test is most effective when exhaust system is cold. Thermal expansion may cause small leaks to the seal.

1. Insert appropriate adaptor into the end of the tailpipe. If the vehicle has dual exhaust with cross over system, plug the other tailpipe to seal the system.
2. Put vapor output hose into adaptor to introduce vapor into the system.
3. A hot catalytic converter may consume some of the vapor.

⚠ CAUTION

- All testing is performed with the engine off.

HOW TO DIAGNOSE UNDER DASHBOARD LEAKS

Many vehicles have a common vacuum line, leading from the engine compartment through the firewall, under the dashboard. This line supplies vacuum to climate control functions and other vacuum-operated systems.

1. Disconnect the vacuum line under the hood at its source.
2. Input vapor into the vacuum line.
3. Observe the flowmeter and pressure gauge while changing the climate controls from heat to vent, to defrost, etc.
4. Change in the flowmeter or pressure gauge's reading will indicate which system is leaking.
5. Set the climate control to the leaking system.
6. Use provided inspection light to locate under dash leaks.
7. Central locking system leak inspection is performed in the same manner.
8. Activate control solenoids while introducing vapor into the system.

MAINTENANCE

CHECK FLUID LEVEL (SEE SET UP)

1. Remove dipstick.
2. Pour OEM-approved smoke producing fluid into fill port until fluid level reaches top line of dipstick.
3. Replace dipstick.
4. Check fluid level every 50-100 tests.

⚠ CAUTION

- Do not overfill.
  First time fill requires MAX. 2 oz (60 ml).

*** Overfill Can Cause Internal Damage**

CLEAN FLOWMETER

1. Disconnect air supply and power from the machine.
2. Remove flow valve with 12mm wrench.
3. Tilt machine forward to drain flowmeter of residue fluid.
4. Reinstall flow valve.

⚠ CAUTION

- Do not use alcohol / cleaners on flowmeter.

DRAIN VAPOR HOSE

1. Elevate the machine.
2. Allow the entire vapor hose to hang downward.
3. Place a container beneath the nozzle to capture fluid.
4. Process takes approximately 5 minutes.

TROUBLESHOOTING

FOR TECH SERVICE, CALL USA AND CANADA: 877-587-2151

PROBLEM	REMEDY
No Green Light	A. Check polarity B. Ensure 12-Volt battery is fully-charged C. Reconnect power cables
Red Light Flashing	A. Ensure 12-Volt battery is fully-charged B. Open circuit / internal component C. Contact Technical Support
No Air Flow	A. Check connection to compressed air B. Open the flow control valve C. Check hoses are not kinked
Not Enough Visible Vapor	A. Check fluid level B. Open the flow control valve C. Check hoses are not kinked
Flowmeter Ball Sticking	A. Clean flowmeter
Gauge Bouncing Flowmeter Bouncing	A. Drain vapor hose

INCLUDED ACCESSORIES AND PART NUMBER LIST

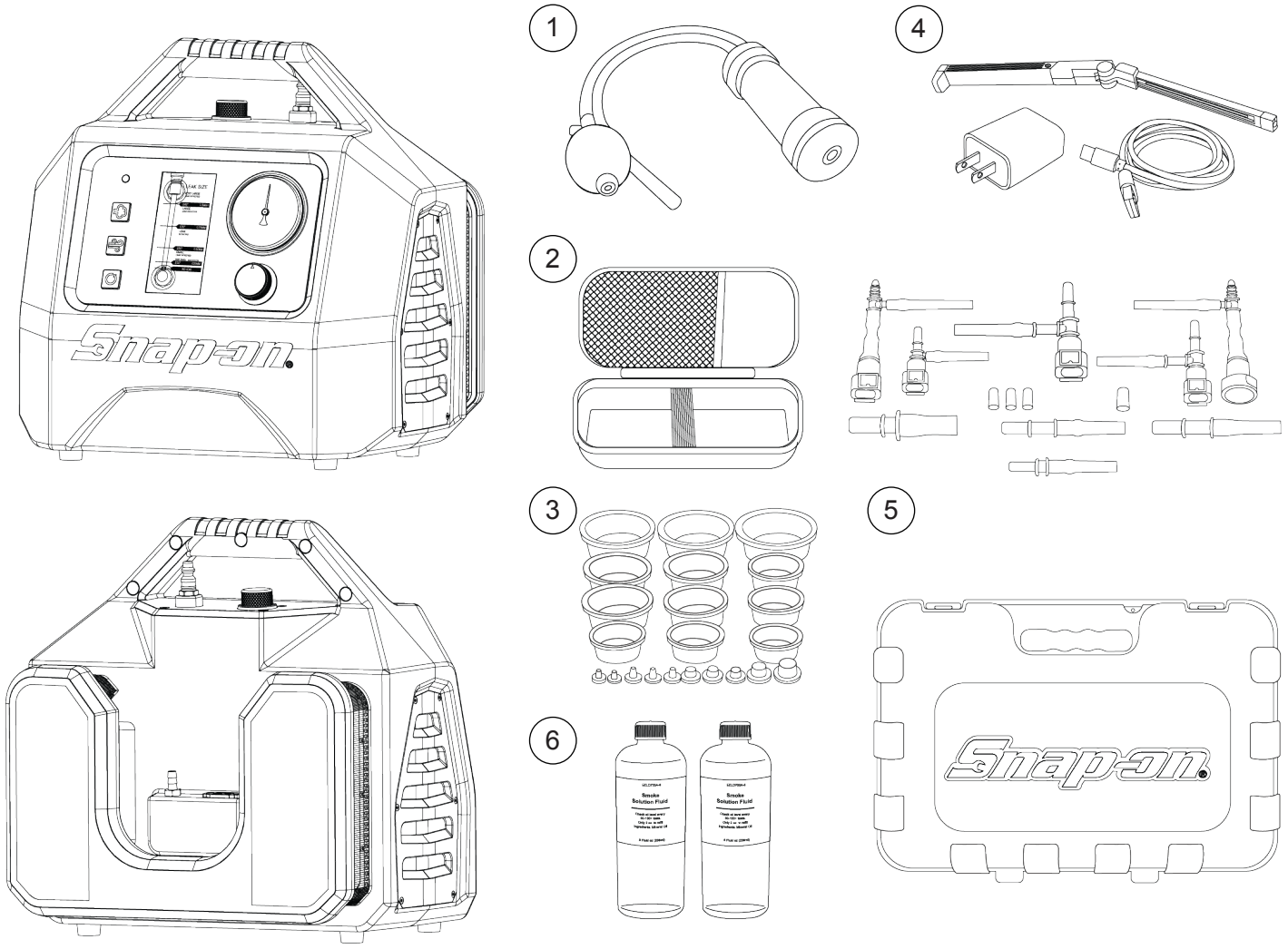

Key	Stock Number	Description
INCLUDED		
	EELD700A	Diagnostic Leak Detector
1	EELD700A-1	Expandable Bladder
2	EELD700A-2	EVAP Quick Connect Kit
3	EELD700A-3	Cap Plug Kit
4	EELD700A-4	Cordless Inspection Light
5	EELD700A-5	Accessory Kit Case
6	EELD700A-6	Smoke Solution 8 fl. oz., 2-included

REPLACEMENT PARTS AND PARTS NUMBER LIST

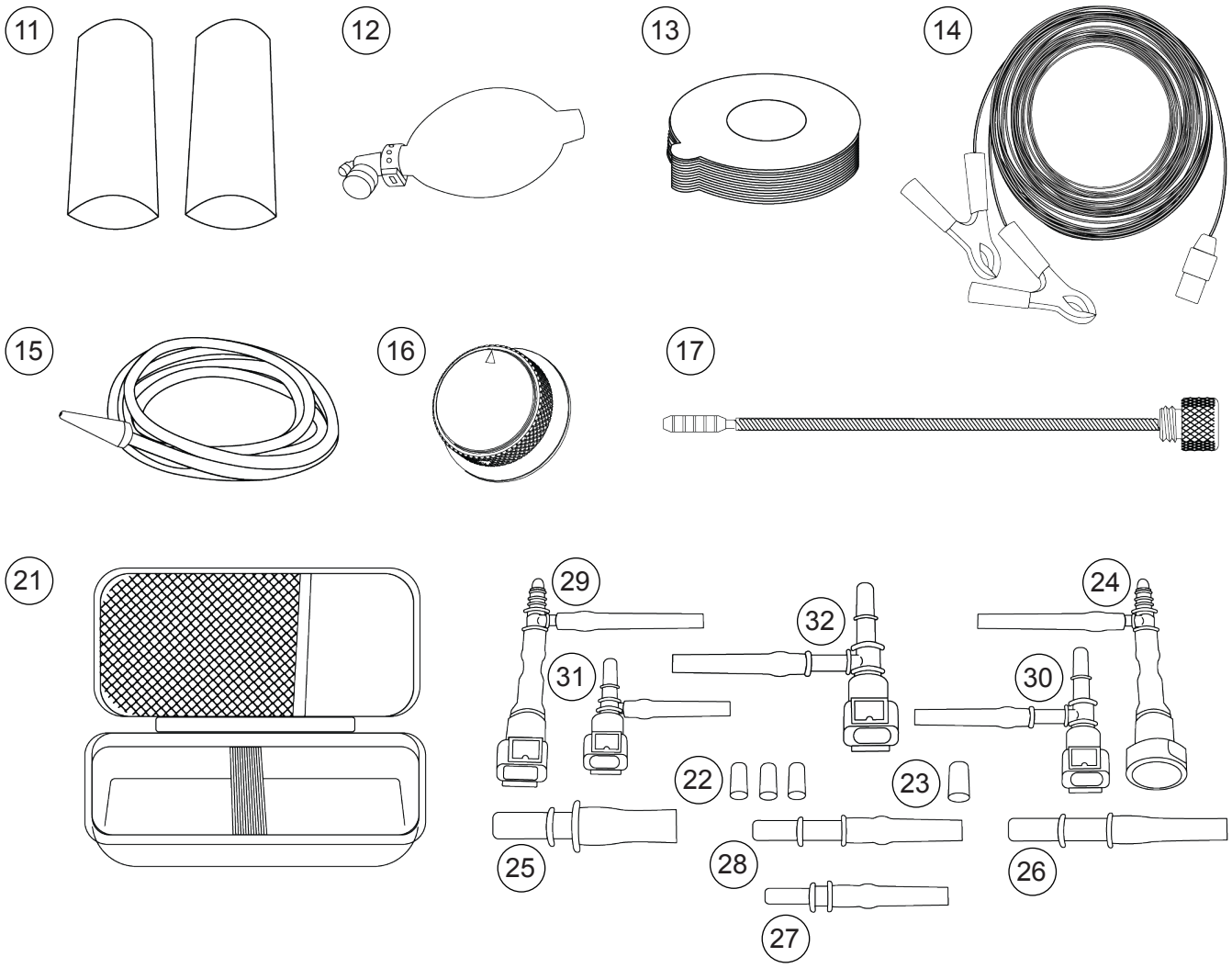

Key	Stock Number	Description
REPLACEMENT		
11	EELD700A-11	Replacement Bladder 2 Pack
12	EELD700A-12	Hand Bulb Replacement
13	EELD700A-13	EVAP Sealing Disks(12)
14	EELD700A-14	12V Power Cable
15	EELD700A-15	Smoke Hose
16	EELD700A-16	Flow Control Knob
17	EELD700A-17	Dipstick Assembly
21	EELD700A-21	Soft Case
22	EELD700A-22	8mm Rubber Vacuum Caps
23	EELD700A-23	9.25mm Rubber Vacuum Cap
24	EELD700A-24	9.89mm Tee Assembly
25	EELD700A-25	12.6mm Male Adaptor Assembly
26	EELD700A-26	9.89mm Male Adaptor Assembly
27	EELD700A-27	7.89mm Male Adaptor Assembly
28	EELD700A-28	9.49mm Male Adaptor Assembly
29	EELD700A-29	12.6mm Tee Assembly
30	EELD700A-30	9.49mm Tee Assembly
31	EELD700A-31	7.89mm Tee Assembly
32	EELD700A-32	11.8mm Tee Assembly

OPTIONAL ACCESSORIES AND PARTS NUMBER LIST

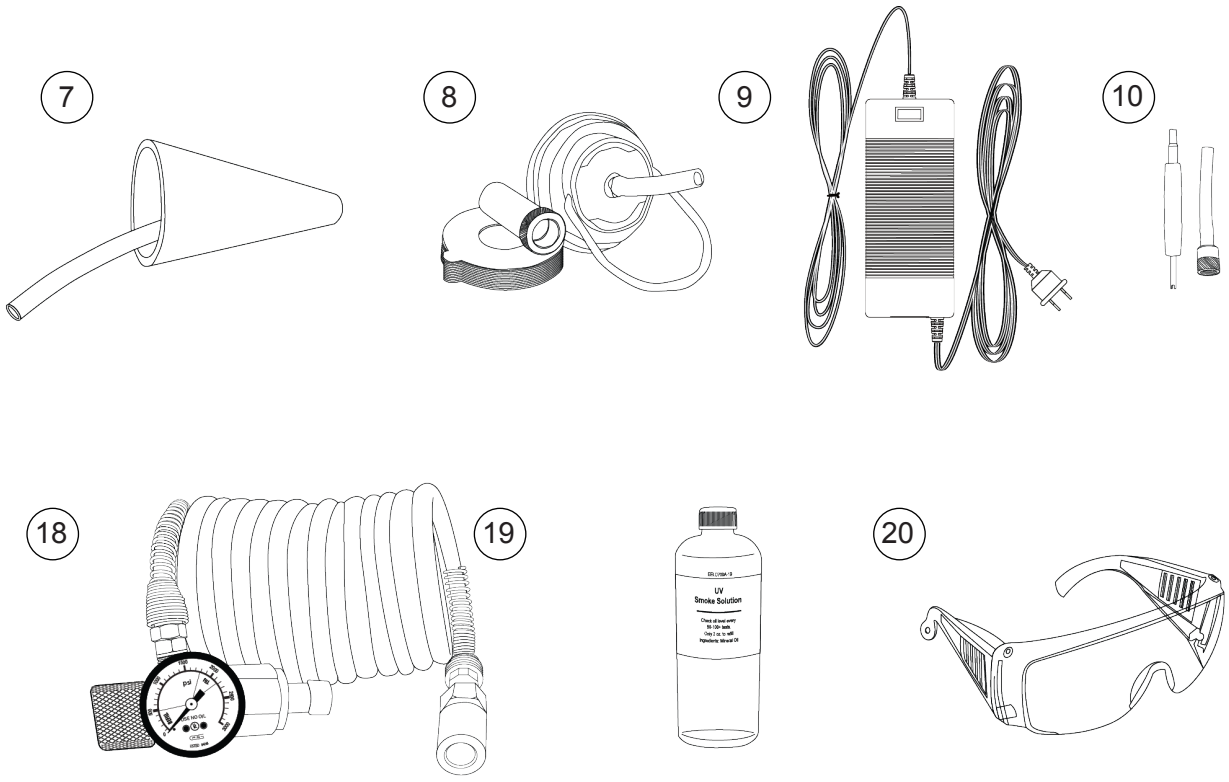

Key	Stock Number	Description
OPTIONAL		
7	EELD700A-7	Exhaust Cone Adaptor
8	EELD700A-8	Universal Filler Neck Connector
9	EELD700A-9	Power Supply-110V
10	EELD700A-10	EVAP Port Adaptor Kit
18	EELD700A-18	Nitrogen Inert Gas Kit
19	EELD700A-19	UV Smoke Solution
20	EELD700A-20	UV Inspection glasses

NOTES

WARRANTY / SERVICE AND REPAIR

SNAP-ON® TOOLS LIMITED ONE (1) YEAR WARRANTY

Snap-on Tools Company (the “Seller”) warrants only to original purchasers who use the Equipment in their professional business that under normal use, care and service, the Equipment (except as otherwise provided herein) shall be free from defects in material and workmanship for one year from the date of original invoice. Seller does not provide any warranty for accessories used with the Equipment that are not manufactured by Seller.

SELLER’S OBLIGATIONS UNDER THIS WARRANTY ARE LIMITED SOLELY TO THE REPAIR OF EQUIPMENT OR PARTS WHICH TO SELLER’S SATISFACTION ARE DETERMINED TO BE DEFECTIVE AND WHICH ARE NECESSARY, IN SELLER’S JUDGMENT, TO RETURN THIS EQUIPMENT TO GOOD OPERATING CONDITION. NO OTHER WARRANTIES, EXPRESS OR IMPLIED OR STATUTORY, INCLUDING WITHOUT LIMITATION, ANY IMPLIED WARRANTY OF MERCHANTABILITY OR FITNESS FOR A PARTICULAR PURPOSE, SHALL APPLY AND ALL SUCH WARRANTIES ARE HEREBY EXPRESSLY DISCLAIMED.

SELLER SHALL NOT BE LIABLE FOR ANY INCIDENTAL, SPECIAL OR CONSEQUENTIAL COSTS OR DAMAGES INCURRED BY PURCHASERS OR OTHERS (including, without limitations, lost profits, revenues, and anticipated sales, business opportunities or goodwill, or interruption of business and any other injury or damage)

This Warranty does not cover (and separate charges for parts, labor and related expenses shall apply to) any damage to, malfunctioning, inoperability or improper operation of the Equipment caused by, resulting from or attributable to (A) abuse, misuse or tampering; (B) alteration, modification or adjustment of the Equipment by other than Seller’s authorized representatives; (C) installation, repair or maintenance (other than specified operator maintenance) of the Equipment or related equipment, attachments, peripherals or optional features by other than Seller’s authorized representatives; (D) improper or negligent use, application, operation, care, cleaning, storage or handling; (E) fire, water, wind, lightning or other natural causes; (F) adverse environmental conditions, including, without limitation, excessive heat, moisture, corrosive elements, dust or other air contaminants, radio frequency interference, electric power failure, power line voltages beyond those specified for the Equipment, unusual physical, electrical or electromagnetic stress and / or any other condition outside of Seller’s environmental specifications; (G) use of the Equipment in combination or connection with other equipment, attachments, supplies or consumables not manufactured or supplied by Seller; or (H) failure to comply with any applicable federal, state or local regulation, requirement or specification governing emission analyzers and related supplies or consumables.

Repairs or replacements qualifying under this Warranty will be performed on regular business days during Seller’s normal working hours within a reasonable time following purchaser’s request. All requests for Warranty service must be made during the stated Warranty period. Proof of purchase date is required to make a Warranty request. This Warranty is non-transferable.

FOR WARRANTY OR SERVICE

If this product fails within the warranty period, follow the warranty procedures with your Snap-on sales representative. Out of warranty flat rate repairs are performed at a designated service center.

Assembled and Tested in United States using Globally Sourced Components
Snap-on is a trademark, registered in the United States and other countries, of Snap-on Incorporated.
©2025 Snap-on Incorporated. All Rights Reserved. All other marks are trademarks of their respective holders.
Snap-on, 2801 80th Street, Kenosha, WI 53143
www.snapon.com
Patents: See https://patents.snapon.com