Blue-Point®

Operator Instructions

Includes – Foreseen Use, Work Stations, Putting Into Service, Operating, Dismantling, Assembly and Safety Rules.

Important

Read these instructions carefully before installing, operating, servicing or repairing this tool. Keep these instructions in a safe accessible place.

Manufacturer/Supplier
Snap-on Tools Company
2801 80th Street
Kenosha
WI 53141-1410
U.S.A.

Product Type
Pistol Style Air
Metal Shear

RPM
2,500
Cycles Per Min.

CE

Model No/Nos
AT195

Serial No.

Product Net Weight	Recommended Use Of Balancer Or Support	Recommended Hose Bore Size – Minimum	Recommended Max. Hose Length
2.64 lbs 1.20 Kg	**N0**	**3/8** Ins **10** M/M	**30** Ft **10** M

Air Pressure

Recommended Working	**6.2**	bar	**90**	PSI
Maximum	**6.2**	bar	**90**	PSI

Noise Level: **Sound Pressure Level 88.1 dB(A)**
Sound Power Level 99.6 dB(A)

Test Method: **Tested in accordance with Pneurop test code PN8NTC1 and ISO Standard 3744**

SAFETY MESSAGES

Personal Safety Equipment

Use – Safety Glasses	**YES**
Use – Safety Gloves	**YES**
Use – Safety Boots	
Use – Breathing Masks	
Use – Ear Protectors	

WARNING

- Always Read Instructions Before Using Power Tools
- Always Wear Safety Goggles
- Wear Hearing Protection
- Avoid Prolonged Exposure To Vibration

Vibration Level **Less than 2.5** Meters / Sec^2

Test Method: **Tested in accordance with ISO standards 8662 Parts 1 & 10**

Safety rules when using an AT195 Air Shear

- Always wear safety goggles.
- Prolonged exposure to vibration may cause injury.
- Read all instructions before using this tool. All operators must be fully trained in its use and aware of these safety rules.
- Do not exceed the maximum working air pressure.
- Use personal protection equipment as recommended.
- Some dust created by power sanding, sawing, grinding, drilling, and other construction activities contains chemicals known to cause cancer, birth defects and other reproductive harm.
- Use only compressed air at the recommended conditions.
- If the tool appears to malfunction, remove from use immediately and arrange for service and repair. If it is not practical to remove tool from service, then shut off the air supply to the tool and write or have written a warning note and attach it to the tool.
- If tool is to be used with a balancer or other suspension device, ensure that the tool is firmly attached to the suspension/support device.
- When operating the tool, always keep the body and particularly the hands away from the working attachment fixed to the tool.
- The tool is not electrically insulated. Never use the tool if there is any chance of coming into contact with live electricity.
- Always when using the tool, adopt a firm footing and/or position and grip the tool sufficiently only to overcome any reaction forces that may result from the tool doing work. Do not overgrip.
- Use only correct spare parts for maintenance and repair. Do not improvise or make temporary repairs. Major servicing and repairs should only be carried out by persons trained to do so.
- Do not lock, tape, wire, etc. the 'On/Off' valve in 'On' position. The trigger/lever, etc. must always be free to return to the 'Off' position when released.

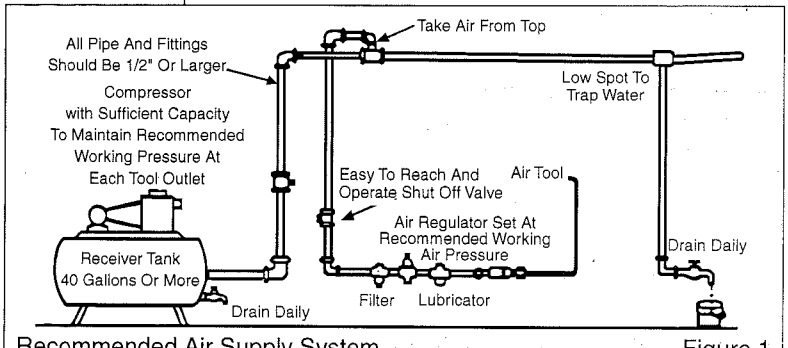

Recommended Air Supply System — Figure 1

- Always shut off the air supply to the tool and press the 'On/Off' valve to exhaust the air from the feed hose before fitting, removing or adjusting the working attachment fitted to the tool.
- Before using the tool, make sure that a shut off device has been fitted to the air supply line and the position is known and easily accessible so that the air supply to the tool can be shut off in an emergency.
- Check hose and fittings regularly for wear.
- Take care against entanglement of the moving parts of the tool with clothing, hair, ties, cleaning rags, rings, jewelry, watches, bracelets, etc. This could cause the body or parts of the body to be drawn towards and in contact with the moving parts of the tool and could be very dangerous.
- It is expected that users will adopt safe working practices and observe all local, regional and country legal requirements when installing, using or maintaining the tool.
- Take care that the exhaust air does not point towards any other person or material or substance that could be contaminated by oil droplets. When first lubricating a tool or if the tool exhaust has a high oil content, do not allow the exhaust air to come near very hot surfaces or flames.
- Never lay the tool down until the working attachment has stopped moving.
- When the tool is not in use, shut off the air supply and press the trigger/lever to drain the supply line. If the tool is not to be used for a period of time, first lubricate, disconnect from air supply and store in a dry average room temperature environment.
- If the tool is passed from one user to a new or inexperienced user, make sure these instructions are passed with the tool.
- Do not remove any manufacturer fitted safety devices where fitted, i.e., wheel guards, safety trigger, speed governors, etc.
- Wherever possible, secure workpiece with clamps, a vise, etc. to make it rigid so it does not move during the work operation. Keep good balance at all times. Do not stretch or overreach.
- Try to match the tool to the work operation. Do not use a tool that is too light or heavy for the work operation. If in doubt, seek advice.
- In general terms, this tool is not suitable for underwater use or use in explosive environments — seek advice from manufacturer.
- Try to make sure that the work area is clear to enable the work task to be performed safely. If practical and possible, try to clear unnecessary obstructions before starting work.
- Always use air hose and couplings with minimum working pressure ratings at least 1 1/2 times the maximum working pressure rating of the tool.

Foreseen Use Of The Tool – AT195

This air shear tool is designed to cut mild steel sheeting up to 1/16" (1.6 mm) thick or aluminum sheeting up to 5/64" (2.0 mm) thick. The air shear tool readily cuts most non-ferrous materials, aluminum, brass, Formica, laminates, fiberglass, Masonite, etc. The tool can generally cut materials of this type up to the maximum thickness that will enter the open space between the blades.

The tool should not be used for any other purpose, modified for alternative use, or modified as a shear unless first checking the suitability of this alternative use with the manufacturer or authorized distributor.

Work Stations

The tool should only be used as a handheld, hand operated tool. It is always recommended that the tool is used when standing on a solid floor. It can be used in other positions, but before any such use, the operator must be in a secure position having a firm grip and footing and be aware of a reaction force on the hand as a result of the tool doing work.

Putting Into Service

Air Supply

Use a clean lubricated air supply that will give a measured air pressure at the tool of 90 p.s.i./6.2 bar when the tool is running with the trigger/lever fully depressed. Use recommended hose size and length. It is recommended that the tool is connected to the air supply as shown in figure 1. Do not connect the tool to the air line system without incorporating an easy to reach and operate air shut off valve. The air supply should be lubricated. It is strongly recommended that an air filter, regulator, lubricator (FRL) is used as shown in Figure 1 as this will supply clean, lubricated air at the correct pressure to the tool. Details of such equipment can be obtained from your supplier. If such equipment is not used, then the tool should be lubricated by shutting off the air supply to the tool, depressurizing the line by pressing the trigger/lever on the tool. Disconnect the air line and pour into the hose adaptor a teaspoonful (5ml) of a suitable pneumatic motor lubricating oil preferably incorporating a rust inhibitor. Reconnect tool to air supply and run tool slowly for a few seconds to allow air to circulate the oil. If tool is used frequently, lubricate on daily basis and if tool starts to slow or lose power.

It is recommended that the air pressure at the tool while the tool is running is 90 psi/6.2 bar.

Operating

Ensure that the action under "Putting Into Service" has been followed and the material to be cut is within the capacity of the tool. See "Foreseen Use Of The Tool". Do not hold the object to be cut in the hand. If the object to be cut is not stable and firm, secure object properly.

To begin cutting, engage the shear head in the areas to be cut and depress the trigger. Be very careful to keep hands, fingers, and any external objects away from cutting blades. Also, ensure no screws, rivets, brads, etc. are in the cutting path so as not to damage the cutting blades or cause a projectile to be thrown from the cutting surface causing injury. Do not force the tool, but allow it to cut at its own rate. A smear of oil or light grease on the line of cut may make the cutting easier. Note that the cutting action of the tool will produce a curled piece of metal the width of the center blade. This curled piece of metal will likely have very sharp edges and care should be taken in removing this or handling the sheared portions to prevent injuries from occurring. Always use proper gloves when operating the air shear tool.

Changing Angle of Cutting Head

If necessary, to gain proper access or alignment between the air shear and working surface, the tool head may be rotated 180 degrees by loosening the set screws (do not remove the set screws) and rotating the head to the desired angle.

NOTE: Before making any adjustment to the tool head, be sure that the air supply has been removed from the tool. Once adjustment has been made, do not reconnect air supply until the set screws have been rechecked for tightness.

An air strainer (screen) is located in the inlet bushing (46) and this should be checked periodically for blockage, particularly if the tool slows or loses power.

Blue-Point

AT195 Pistol Style Air Metal Shear

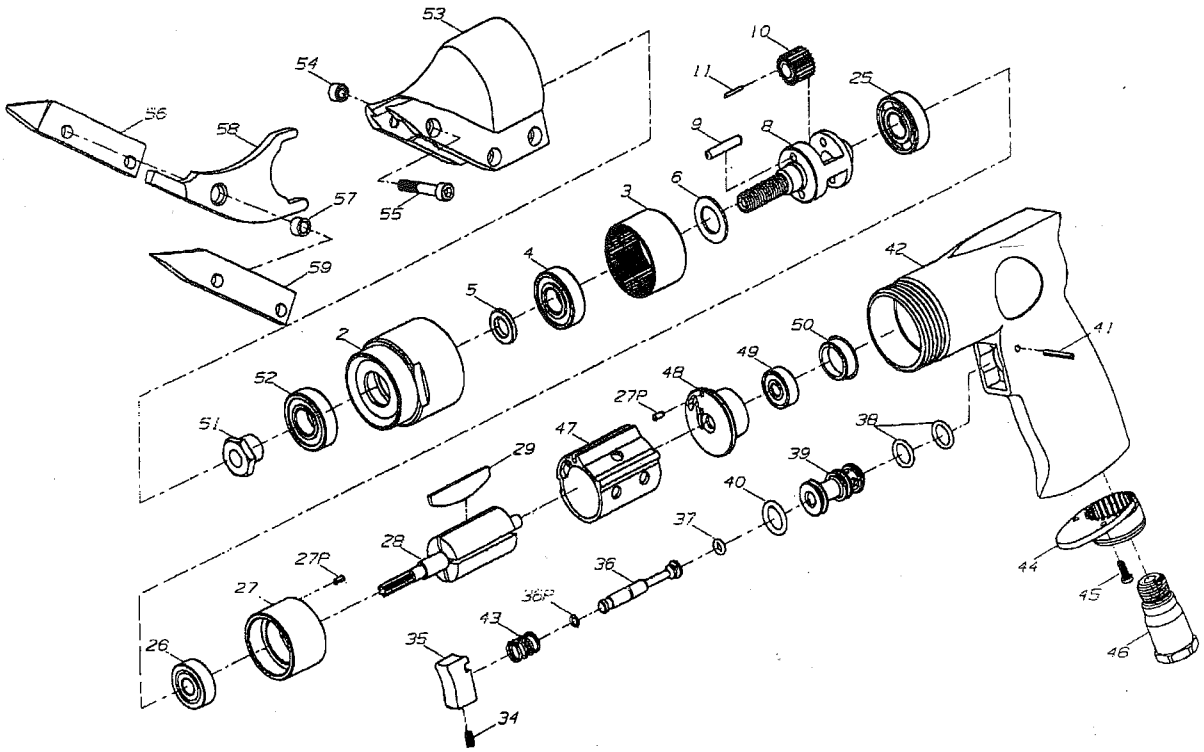

Ref. No.	Part No.	Description
2	AT195-1	Clamp Nut
3	AT195-2	Internal Gear
4	AT195-3	Ball Bearing
5	AT195-4	Washer
6	AT195-5	Washer
8	AT195-6	Cage
9	AT195-7	Gear Pin (2)
10	AT195-8	Gear (2)
11	AT195-9	Needle (22)
25	AT195-10	Ball Bearing
26	AT195-11	Ball Bearing
27	AT195-12	Front End Plate
27P	AT195-42	Guide Pin (2)
28	AT195-13	Rotor
29	AT195-14	Rotor Blade (4)
34	AT195-15	Screw
35	AT195-16	Trigger
36	AT195-17	Valve
36P	AT195-43	O-Ring
37	AT195-18	O-Ring
38	AT195-19	O-Ring (2)
39	AT195-20	Valve Bushing
40	AT195-21	O-Ring

Ref. No.	Part No.	Description
41	AT195-22	Pin
42	AT195-23	Motor Housing
43	AT195-24	Spring
44	AT195-25	Deflector
45	AT195-26	Screw (2)
46	AT195-27	Inlet Bushing
47	AT195-28	Cylinder
48	AT195-29	Rear End Plate
49	AT195-30	Ball Bearing
50	AT195-31	Cap
51	AT195-32	Eccentric Nut
52	AT195-33	Ball Bearing
53	AT195-34	Cutter Housing
54	AT195-35	Screw Nut (3)
55	AT195-36	Screw (3)
56	AT195-37	Left Blade
57	AT195-38	Spacer Nut (2)
58	AT195-39	Center Blade
59	AT195-40	Right Blade
Not Shown	AT475A-43	Warning Label
Not Shown	AT195-44	Nameplate
Not Shown	AT406A-8	Nameplate Screw (2)

Dismantling & Assembly Instructions

Disconnect tool from air supply.

Loosen screw (55) near the clamp nut (2) and remove the cutter housing complete with blades (53). Unscrew screws (55) and nuts (54), then carefully take off the three sharp blades (56, 58, 59) and two nuts (57).

Unscrew the eccentric nut (51) and then tap the eccentric nut (51) from the ball bearing (52). Unscrew the clamp nut (2), remove the gear set (4, 5, 6, 8, 9, 10, 11, 25) and pull out the internal gear (3). Step by step, take off washer (5), ball bearing (4), and washer (6). Push pins (9) out from the cage (8), and then move gears (10) and needles (11). Tap the cage (8) out from the ball bearing (25).

Pull out the motor-assembly (26, 27, 27p, 28, 29, 47, 48, 49, 50) from the motor housing (42). Tap the head of rotor (28) carefully and then remove the end plate (27) with ball bearing (26) and pin (27p), the cylinder (47) and four rotor blades (29). Remove ball bearing (26) and pin (27p) from the front end plate (27). Pull out the cap (50), then tap the end of rotor (28) to remove the rear end plate (48) with ball bearing (49). Remove the ball bearing (49) from the rear end plate (48).

Unscrew the screw (34), and remove the trigger (35) and spring (43). Tap the pin (41) out, then pull out the valve set (36, 36p, 37, 38, 39, 40) from the motor housing (42). Pull out the valve (36) with O-rings (36p, 37), then remove O-rings (36p, 37). Remove O-rings (38, 40) from the valve bushing (39). Finally, unscrew the inlet bushing (46) and screws (45) to remove the deflector (44).

Reassembly

Clean all parts and examine for wear. Use only manufacturer or authorized distributor supplied parts and replace any worn parts. Look in particular for wear on gears, ball bearings and blades. Coat all parts with a suitable pneumatic tool lubricating oil, one preferably containing a rust inhibitor, and reassemble in the reverse order. With the trigger depressed, pour 5ml of a suitable pneumatic tool lubricating oil into inlet and release. Connect the tool to a suitable air supply and operate the tool slowly for 2 or 3 seconds to allow oil to circulate.

Operation Specification	
Air Consumption	4.0 cfm (28 scfm)
Strokes Per Minute	2500
Width Of Cut	7/32" (5.6 mm)
Cutting Capacity	3/64" (1.2 mm)
Cutting Speed	180"/Min. (4572 mm/min)
Length	10" (254 mm)
Air Inlet Thread	1/4-18NPT
at 90 PSIG/6.2 bar	

Notes

CE

Declaration of Conformity

Snap-on Tools Company

2801 80th Street, Kenosha, WI 53141-1410, U.S.A.

declare under our sole responsibility that the product

Model AT195 Air Shears, Serial Number

to which this declaration relates is in conformity with the following standard(s) or other normative document(s)

EN792 (Draft), EN292 Parts 1 & 2, ISO 8662 Parts 1 & 10, Pneurop PN8NTC1

following the provisions of **89/392/EEC as amended by 91/368/EEC & 93/44/EEC Directives**

Gerald E Seebeck

Gerald E. Seebeck (V.P./General Manager, Power Tools Group)

Name and signature or equivalent marking of authorized person

ZAT195CE
Printed in Taiwan
11/01