JAN. 29. 2002

Blue-Point®

Operator Instructions

Includes – Foreseen Use, Work Stations, Putting Into Service, Operating, Dismantling, Assembly and Safety Rules.

Important

Read these instructions carefully before installing, operating, servicing or repairing this tool. Keep these instructions in a safe accessible place.

Manufacturer/Supplier
Snap-on Tools Company
2801 80th Street
Kenosha
WI 53141-1410
U.S.A.

Product Type
1/4" Medium Die Grinder

RPM
22,000
Cycles Per Min.

CE

Model No/Nos
AT105

Serial No.

Product Net Weight	Recommended Use Of Balancer Or Support	Recommended Hose Bore Size – Minimum	Recommended Max. Hose Length
1.34 lbs 0.61 Kg	**NO**	**1/4** Ins **8** M/M	**30** Ft **10** M

Air Pressure

Recommended Working	**6.2**	bar	**90**	PSI
Maximum	**6.2**	bar	**90**	PSI

Noise Level: **Sound Pressure Level 91.0 dB(A)**
Sound Power Level 102.0 dB(A)

Test Method: **Tested in accordance with Pneurop test code PN8NTC1 and ISO Standard 3744**

SAFETY MESSAGES

Personal Safety Equipment

Use – Safety Glasses	**YES**
Use – Safety Gloves	**YES**
Use – Safety Boots	
Use – Breathing Masks	**YES**
Use – Ear Protectors	**YES**

WARNING

Always Read Instructions Before Using Power Tools

Always Wear Safety Goggles

Wear Hearing Protection

Avoid Prolonged Exposure To Vibration

Vibration Level **Less than 2.5** Meters / Sec^2

Test Method: **Tested in accordance with ISO standards 8662 Parts 1 & 13**

Safety rules when using an AT105 Die Grinder

- Use accessories rated at least 22,000RPM.
- Prolonged exposure to vibration may cause injury.
- Read all instructions before using this tool. All operators must be fully trained in its use and aware of these safety rules.
- Do not exceed the maximum working air pressure.
- Use personal protection equipment as recommended.
- Some dust created by power sanding, sawing, grinding, drilling, and other construction activities contains chemicals known to cause cancer, birth defects and other reproductive harm.
- Use only compressed air at the recommended conditions.
- If the tool appears to malfunction, remove from use immediately and arrange for service and repair. If it is not practical to remove tool from service, then shut off the air supply to the tool and write or have written a warning note and attach it to the tool.
- If tool is to be used with a balancer or other suspension device, ensure that the tool is firmly attached to the suspension/support device.
- When operating the tool, always keep the body and particularly the hands away from the working attachment fixed to the tool.
- The tool is not electrically insulated. Never use the tool if there is any chance of coming into contact with live electricity.
- Always when using the tool, adopt a firm footing and/or position and grip the tool sufficiently only to overcome any reaction forces that may result from the tool doing work. Do not overgrip.
- Use only correct spare parts for maintenance and repair. Do not improvise or make temporary repairs. Major servicing and repairs should only be carried out by persons trained to do so.
- Do not lock, tape, wire, etc. the 'On/Off' valve in 'On' position. The trigger/lever, etc. must always be free to return to the 'Off' position when released.
- Always shut off the air supply to the tool and press the

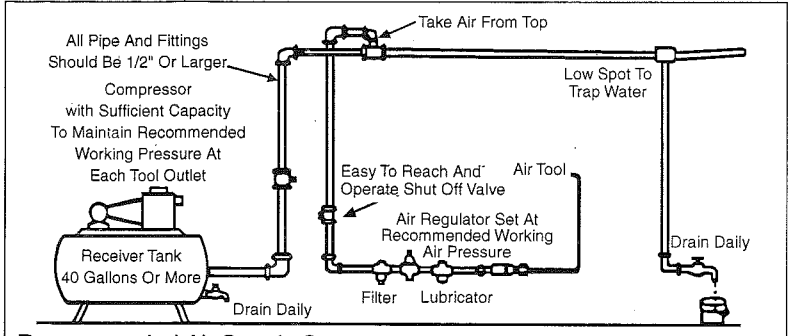

Recommended Air Supply System — Figure 1

'On/Off' valve to exhaust the air from the feed hose before fitting, removing or adjusting the working attachment fitted to the tool.

- Before using the tool, make sure that a shut off device has been fitted to the air supply line and the position is known and easily accessible so that the air supply to the tool can be shut off in an emergency.
- Check hose and fittings regularly for wear.
- Take care against entanglement of the moving parts of the tool with clothing, hair, ties, cleaning rags, rings, jewelry, watches, bracelets, etc. This could cause the body or parts of the body to be drawn towards and in contact with the moving parts of the tool and could be very dangerous.
- It is expected that users will adopt safe working practices and observe all local, regional and country legal requirements when installing, using or maintaining the tool.
- Take care that the exhaust air does not point towards any other person or material or substance that could be contaminated by oil droplets. When first lubricating a tool or if the tool exhaust has a high oil content, do not allow the exhaust air to come near very hot surfaces or flames.
- Never lay the tool down until the working attachment has stopped moving.
- When the tool is not in use, shut off the air supply and press the trigger/lever to drain the supply line. If the tool is not to be used for a period of time, first lubricate, disconnect from air supply and store in a dry average room temperature environment.
- If the tool is passed from one user to a new or inexperienced user, make sure these instructions are passed with the tool.
- Do not remove any manufacturer fitted safety devices where fitted, i.e., wheel guards, safety trigger, speed governors, etc.
- Wherever possible, secure workpiece with clamps, a vise, etc. to make it rigid so it does not move during the work operation. Keep good balance at all times. Do not stretch or overreach.
- Try to match the tool to the work operation. Do not use a tool that is too light or heavy for the work operation. If in doubt, seek advice.
- In general terms, this tool is not suitable for underwater use or use in explosive environments — seek advice from manufacturer.
- Try to make sure that the work area is clear to enable the work task to be performed safely. If practical and possible, try to clear unnecessary obstructions before starting work.
- Always use air hose and couplings with minimum working pressure ratings at least 1 1/2 times the maximum working pressure rating of the tool.

Foreseen Use Of The Tool – AT105

This die grinder is primarily designed for use with bonded abrasive mounted point grinding wheels. It may also be used with steel rotary files and carbide burrs provided their speed rating matches or exceeds the speed of the grinder.

This tool should not be fitted with cutting off wheels, saw blades, drill bits, etc. If there is any doubt about the correct use of this product contact your supplier for advice.

Also, make sure that the shank size of the attachment to be driven marches the collet size fitted in the grinder and that the maximum allowed running speed of the attachment exceeds that marked on the grinder.

There are special rules governing the use of bonded abrasive mounted point grinding wheels – for details see section "Operating".

Work Stations

The tool should only be used as a handheld, hand operated tool. It is always recommended that the tool is used when standing on a solid floor. It can be used in other positions, but before any such use, the operator must be in a secure position having a firm grip and footing and be aware of the extra safety precautions that must be observed when using Grinding Machines.

Putting Into Service

Air Supply

Use a clean lubricated air supply that will give a measured air pressure at the tool of 90 p.s.i./6.2 bar when the tool is running with the trigger/lever fully depressed. Use recommended hose size and length. It is recommended that the tool is connected to the air supply as shown in figure 1. Do not connect the tool to the air line system without incorporating an easy to reach and operate air shut off valve. The air supply should be lubricated. It is strongly recommended that an air filter, regulator, lubricator (FRL) is used as shown in Figure 1 as this will supply clean, lubricated air at the correct pressure to the tool. Details of such equipment can be obtained from your supplier. If such equipment is not used, then the tool should be lubricated by shutting off the air supply to the tool, depressurizing the line by pressing the trigger/lever on the tool. Disconnect the air line and pour into the hose adaptor a teaspoonful (5ml) of a suitable pneumatic motor lubricating oil preferably incorporating a rust inhibitor. Reconnect tool to air supply and run tool slowly for a few seconds to allow air to circulate the oil. If tool is used frequently, lubricate on daily basis and if tool starts to slow or lose power.

It is recommended that the air pressure at the tool while the tool is running is 90 psi/6.2 bar.

Operating

Select a suitable mounted point that has a free running speed higher than the maximum running speed marked on the tool. Make sure that the diameter of the shank exactly matches the diameter of the collet mounted in the grinder. There are two standard sizes of collet available for use with this grinder, i.e.,

1. – 1/4" Dia. (0.250 ins) (6.35 mm)
2. – 1/8" Dia. (0.125 ins) (3.175 mm)

Additionally, two metric sizes of collet are available for use with this grinder, i.e.,

1. – 6 mm (0.2362 in.)
2. – 3 mm (0.1181 in.)

Always match correctly the shank size to the collet size. If uncertain, have parts measured by a competent person.

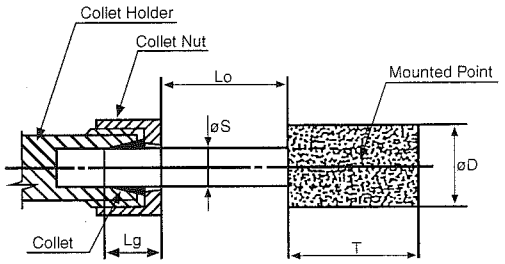

D = diameter of mounted point
T = length of mounted point
Lo = overhang
S = diameter of shank
Lg = gripping length

Figure 2. Gripping length of collet and chuck

Push the shank as far as possible into the collet and tighten the collet nut using the spanners provided on the collet nut and the output spindle. The shank of the mounted point may be pulled toward from the maximum insertion length, but always ensure a maximum gripping length of not less than 10mm – see Figure 2.

Be aware that the allowed running speed of the mounted point is lowered because of an increase in the length of the shank between the end of the collet and the body of the mounted point. This distance is shown in Figure 2. as "Lo" and is called the overhang. The information with respect to mounted point, permissible running speed and reduction in running speed due to an increase in

Blue-Point

AT105 1/4" Medium Die Grinder

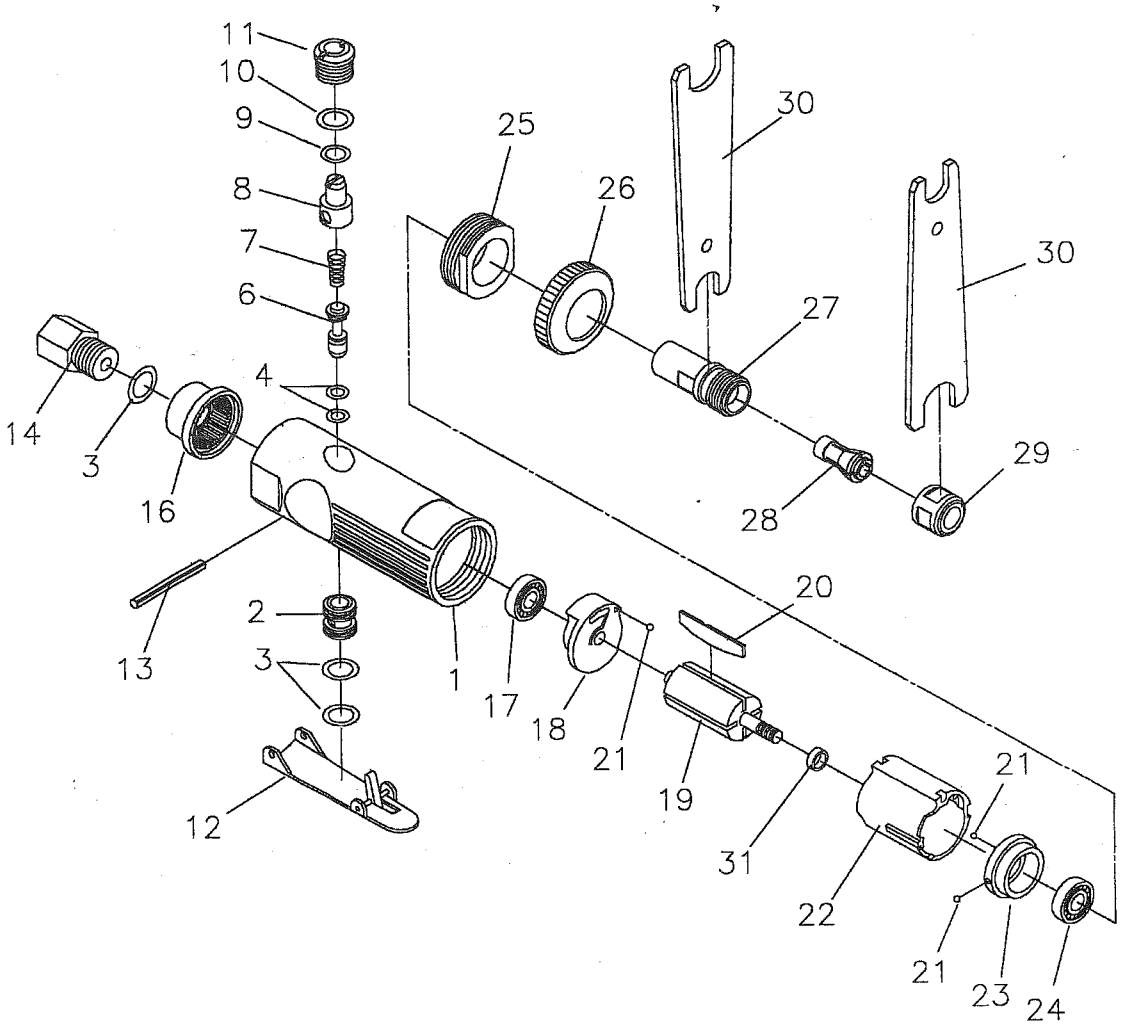

Ref. No.	Part No.	Description
1	AT105-1	Housing Assembly (including 2 & 3)
2	AT105-2	Throttle Valve Bushing
3	AT105-3	O-Ring (3)
4	AT105-4	O-Ring (2)
6	AT105-6	Throttle Pin
7	AT105-7	Spring
8	AT105-8	Air Regulator
9	AT109-9	O-Ring
10	AT105-9	O-Ring
11	AT105-10	Valve Plug
12	AT109-12	Safety Throttle Lever
13	AT109-13	Pin
14	AT109-40	Hose Adaptor
16	AT105-11	Muffler
17	AT156-17	Ball Bearing
18	AT105-12	Rear End Plate
19	AT105-13	Rotor
20	AT105-14	Rotor Blade (4)

Ref. No.	Part No.	Description
21	AT105-15	Steel Ball (3)
22	AT105-16	Cylinder
23	AT105-17	Front End Plate
24	AT105-18	Ball Bearing
25	AT105-19	Clamp Nut
26	AT105-20	Housing Cap
27	AT105-21	Chuck Spindle
28	AT109-35	Collet (1/4")
29	AT105-23	Collet Nut
30	AT105-30	Spanner (14 x 19 mm) (2)
31	AT105-26	Spacer
Optional	AT105-22	Collet (6 mm)
Optional	AT105-32	Collet (1/8")
Optional	AT105-31	Collet (3 mm)
Not shown	AT105-27	Nameplate
Not shown	AT105-28	Warning Label (Caution)
Not shown	AT105-29	Warning Label (Goggles)

overhang is available from the supplier of the mounted points.
If the increase in overhang for access reasons takes the permissible running speed of the mounted point below the free running speed of the grinder, select a smaller diameter mounted point.
The fitting of the mounted point should be done by a trained operator. When first starting the grinder with a new point or wheel fitted, the grinder should not be near other persons and be held in a protected area. i.e. under a bench, and run for a few seconds. This will protect personnel from possible effects of damage to the mounted point or wheel before it is was fitted to the grinder i.e. wheel breakage.
Always use eye protection and wear protective gloves if there are sharp edges in the work area. The tool and the grinding process can create a noise level such that the use of ear protectors is advised.
If the grinding process creates a dust, then use a suitable breathing mask. Check that the material being worked will not cause harmful dust or fumes. If this is so, then special breathing masks may be required.
If the grinder vibrates when first fitting a mounted point or during operation, remove from service immediately and correct fault before continuing to use.
Do not apply excessive pressure as this will reduce the cutting efficiency and can bend the shank of the mounted point causing vibration and the possibility of breakage. Apply light loads to allow the wheel to cut.
Handle the grinder with care. If the grinder is dropped, carefully check the mounted point for damage, i.e. cracks, chipping, and start for the first time as for fitting a new wheel, i.e. under a bench.
Never exceed the maximum air pressure. If there is this possibility, always use this grinder with a pressure reducing valve fitted in the supply line. Your supplier will advise of suitable equipment.
This grinder is fitted with a speed regulator and the speed may be reduced by rotating air regulator (8) with a suitable screwdriver. When making speed checks, always rotate the air regulator to the position that gives the highest maximum speed.
The lever on a Die Grinder is the on/off valve. The air flow can be controlled by the adjusting of the valve (8) opposite the lever. Using a screwdriver, turn the valve (8) until the slot aligns with the center line of the tool for maximum speed and power and rotate 90° for minimum speed and power. An air strainer is located in the hose adaptor (14) of the grinder. Remove hose adaptor (14) to clean strainer.

Dismantling & Assembly Instructions

Disconnect tool from air supply.
Unscrew collet nut (29) and pull out collet (28). Grip motor housing (1) on the flats at the rear end in a vise fitted with soft jaws and unscrew front cap (26) and drive out lever pin (13) and take off safety lever (12). Do not dismantle safety lever (12). Unscrew hose adaptor (14) and with a needle pointed tool, remove O-ring (3) and pull off muffler (16). With a wide bladed screwdriver, unscrew valve screw (11) and take out O-rings (10) and (9), air regulator (8), spring (7), O-ring (4) and valve stem (6). Do not remove valve bushing (2) from motor housing (1) unless a replacement is required. Unscrew nut clamp (25) and pull out the motor and spindle assembly. Note how ball (21) located in the side of front plate (23) locates in the slot in motor housing (1) for reassembly.
Grip the rear plate (18) and tap the end of rotor (19) to drive it through the rear plate (18) and bearing (17) assembly. Tap out bearing (17) from rear plate (18). Remove cylinder (22) noting how it locates relative to front and rear plates (18) and (23) for reassembly and take out 4 rotor blades (20) from rotor (19). Grip rotor (19) in a vise fitted with soft jaws, so as not to damage the rotor, and unscrew spindle (27). The rotor (19) may be pulled or tapped free from front plate (23), and bearing (24). Take off spacer (31) from rotor (19).

Reassembly

Clean and examine parts for wear and replace any parts only with those supplied by the manufacturer or authorized distributor. Ensure that the faces of the end plates (18) and (23) that abut cylinder (22) are flat and free from burrs and surface marking. If necessary, lap on a flat very fine grade of abrasive paper. Lightly coat all parts with a suitable pneumatic tool lubricating oil and pack bearings with a lithium or molybdenum based general purpose grease and assemble in the reverse order.
With lever (12) depressed, pour into hose adaptor (14) 5ml of a pneumatic tool lubricating oil. Release the lever and connect the tool to a suitable air supply. Run tool slowly for a few seconds to allow oil to circulate. Check the collet and safety lever function correctly. Check the speed is correct with the air pressure set in maximum open position and at maximum air inlet pressure.

Operation Specification	
Air Consumption	4.0 cfm (28 scfm)
Air Inlet Thread	1/4-18NPT
Overall Length	6.5" (165mm)
at 90 PSIG/6.2 bar	

Notes

CE

Declaration of Conformity

Snap-on Tools Company

2801 80th Street, Kenosha, WI 53141-1410, U.S.A.

declare under our sole responsibility that the product

Model AT105 1/4" Medium Die Grinder, Serial Number

to which this declaration relates is in conformity with the following standard(s) or other normative document(s)

EN792 (Draft), EN292 Parts 1 & 2, ISO 8662 Parts 1 & 13, Pneurop PN8NTC1

following the provisions of **89/392/EEC as amended by 91/368/EEC & 93/44/EEC Directives**

Gerald E Seebeck

Gerald E. Seebeck (V.P./General Manager, Power Tools Group)

Name and signature or equivalent marking of authorized person

ZAT105CE
Printed in Taiwan
10/01