

ControlTech®
LINK Wireless

ELECTRONIC TORQUE-ANGLE WRENCH

20-3104-SO REV. B
21-11

IMPORTANT SAFETY INSTRUCTIONS



WARNING *Risk of flying particles.*

Over-torquing can cause breakage. Force against flex stops on flex head can cause head breakage. An out of calibration angle wrench can cause part or tool breakage. Broken hand tools, sockets or accessories can cause injury. Excess force can cause crowfoot or flare nut wrench slippage.



- ❑ Read **this manual completely** before using ELECTRONIC WRENCH.
- ❑ To ensure accuracy, work must not move in angle mode.
- ❑ For personal safety, and to avoid wrench damage, follow good professional tool and fastener installation practices.
- ❑ Periodic recalibration is necessary to maintain accuracy.
- ❑ **Wear safety goggles, user and bystanders.**



- ❑ Be sure all components, including all adaptors, extensions, drivers and sockets are rated to match or exceed torque being applied.
- ❑ Observe all equipment, system and manufacturer's warnings, cautions and procedures when using this wrench.
- ❑ Use correct size socket for fastener.
- ❑ Do not use sockets showing wear or cracks.
- ❑ Replace fasteners with rounded corners.
- ❑ **To avoid damaging wrench:** Never use wrench with power off. Always turn ON wrench so applied torque is being measured.



- ❑ Do not press **POWER** ⏻ while torque is applied or while wrench is in motion.
- ❑ Never use this wrench to break fasteners loose.
- ❑ Do not use extensions, such as a pipe, on handle of wrench.
- ❑ Check that wrench capacity matches or exceeds each application before proceeding.
- ❑ When using negative offsets, verify maximum targets are not exceeded (see tables on page 6).
- ❑ Verify calibration if dropped.
- ❑ Make sure ratchet direction lever is fully engaged in correct position.
- ❑ Verify calibration of wrench if you know or suspect its capacity has been exceeded.
- ❑ Do not force head of flex head drives against stops.
- ❑ Always adjust your stance to prevent a possible fall should something give while using wrench.
- ❑ Do not attempt to recharge alkaline cells.
- ❑ Store wrench in dry place.
- ❑ Remove batteries when storing wrench for periods longer than 3 months.



WARNING *Electrical Shock Hazard.*

Electrical shock can cause injury. Metal handle is not insulated.
Do not use on live electrical circuits.

SAVE THESE INSTRUCTIONS

Disclaimer

Operation of CTECH LINK™ Wrench is not warranted in an EU member state if operating instructions are not in that State's language. Contact Snap-on if a translation is needed.

This equipment has been tested and found to comply with the limits for a Class B digital device, pursuant to Part 15 of the FCC rules. These limits are designed to provide reasonable protection against harmful interference in a residential installation. This equipment generates, uses, and can radiate radio frequency energy and, if not installed and used in accordance with the instructions, may cause harmful interference to radio communications. However, there is no guarantee that interference will not occur in a particular installation. If this equipment does cause harmful interference to radio or television reception, which can be determined by turning the equipment off and on, the user is encouraged to try to correct the interference by one or more of the following measures:

- Reorient or relocate the receiving antenna.
- Increase the separation between the equipment and receiver.
- Connect the equipment into an outlet on a circuit different from that to which the receiver is connected.
- Consult the dealer or an experienced radio/TV technician for help.

This device complies with Industry Canada license-exempt RSS standard(s). Operation is subject to the following two conditions:
(1) This device may not cause interference, and
(2) This device must accept any interference, including interference that may cause undesired operation of the device.

Le présent appareil est conforme aux CNR d'Industrie Canada applicables aux appareils radio exempts de licence. L'exploitation est autorisée aux deux conditions suivantes :
(1) l'appareil ne doit pas produire de brouillage, et
(2) l'utilisateur de l'appareil doit accepter tout brouillage radioélectrique subi, même si le brouillage est susceptible d'en compromettre le fonctionnement.

Note: During high-level Electrostatic Discharge events, temporary loss of function may occur that requires operator intervention or system reset. As a precaution, discharge non-energized work area prior to contact with screwdriver.

Specifications

Head Type

- Square drive 72 or 80 teeth, sealed fixed ratchet
- J, Y, X and Z-Shank Female Type
- ISO

Display

- DISPLAY TYPE: Dot Matrix LCD (192 x 65 Resolution)
- VIEWING DIRECTION: 6:00
- BACKLIGHT: WHITE (LED)

Sealed Button Pad

POWER - ON/OFF and torque and angle re-zero

ENTER - Measurement mode select and menu entry

UP – Increments torque and angle settings and menu navigation

DOWN - Decrements torque and angle settings and menu navigation

UNITS - Units select (ft-lbs, in-lbs, Nm, Kgm, Kg-cm, dNm) and enter PSET (preset) menu

LCD BACKLIGHT – Illuminates all screens and last peak torque or angle recall

Functions

The intended use of the CTECH LINK torque wrench is to be used with the CONTROL LINK and indoor use. Not intended for use in wet locations.

- Set - torque or angle target
- Track - real time display of torque or accumulated angular rotation with progress lights
- Peak Hold – 5 sec. flashing of peak torque or alternating peak torque/angle on release of torque
- Peak Recall - display last peak torque or peak torque/angle on button press
- Memory - display of last 1500 peak torque or peak torque/angle readings

Accuracy

- Temperature: @ 22 C (72°F)
- Angle: ±1% of reading ±1° @ angular velocity > 10°/sec < 180°/sec
- Torque: (unflexed)

	CW	CCW	
	±2%	±3%	of reading, 20% to 100% of full scale
	±4%	±6%	of reading, 5% to 19% of full scale

Dimensions: Length / Weight/Drive

Fixed Head Model	Length	Weight	Square Drive	Interchangeable Head	Length	Weight
CTLNK1R240	14.1 in.	1.97 lbs.	¼ in.	CTLNK1J240	12.5 in.	1.8 lbs.
CTLNK2R100	18.9 in.	3.1 lbs.	⅜ in.	CTLNK2Y100	17.2 in.	2.7 lbs
CTLNK3R250	26.7 in.	4.5 lbs.	½ in.	CTLNK3X250	24.1 in.	3.6 lbs.
CTLNK4R600	48.6 in.	10.5 lbs.	¾ in.	CTLNK4Z600	44.8 in.	7.6 lbs.

Preset Range

- ANGLE: 0 to 360° CW or CCW (Display Resolution 1°)
- TORQUE: (Display Range and Resolution as shown below)

Fixed Head Model	Interchangeable Head	ft-lb	in-lbs	Nm	Kgm	kg-cm	dNm	overload (ft-lb)
CTLNK1R240	CTLNK1J240	1.00-20.00	12.0-240.0	1.36-27.12	N/A	13.8-276.5	13.6-27.12	25
CTLNK2R100	CTLNK2Y100	5.0-100.0	60-1200	6.8-135.6	N/A	69-1383	68-1356	125
CTLNK3R250	CTLNK3X250	12.5-250.0	150-3000	16.9-339.0	1.73-34.56	N/A	N/A	312
CTLNK4R600	CTLNK4Z600	30.0-600.0	360-7200	40.7-813.5	4.15-82.95	N/A	N/A	750

Environmental Parameters: Clause 1.4 of IEC610101: (For use in Pollution Degree 2 Environments).
Altitude: Up to 2000 meters
Operating Temperature: 0°F - 130°F (-18°C to 54°C)
Storage Temperature: 0°F to 130°F (-18°C to 54°C)
Measurement Drift: ANGLE: -0.12 Angular Degrees per Degree C TORQUE: +0.01% of reading per Degree C
Humidity: Up to 90% non-condensing
Battery: Three "AA" Lithium Cell (L91-FR6-1.5V), up to 80 hours continuous operation
(Three "AAA" for 240 models, up to 60 hours continuous operation)
Default Auto Shut-off: After 2 minutes idle – (Adjustable, see Advanced Settings)

User Instructions Report Mode

- Basic Functions (Quick Start)
- Control Box Mode (Report)

PROGRESS LIGHTS

Yellow - First light indicates 40% of target torque or angle reached, Second indicates 60% of target reached, Third indicates 80% of target reached.

Green - Indicates target torque or angle reached.

Red - Indicates exceeded torque or angle target plus 4% or exceeded maximum Preset target**.**

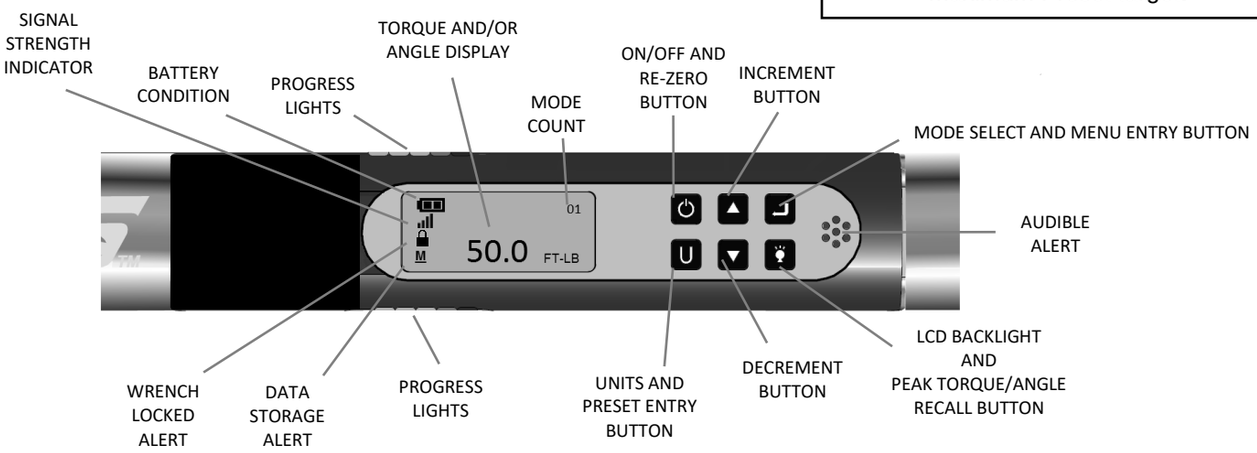

Figure 1

Install three fresh Alkaline "AA" cells into handle of wrench.
("AAA" for 240 models)

Wrench Power On Sequence

*Note: Do not turn on wrench while torque is applied, otherwise torque zero offset will be incorrect and wrench will indicate a torque reading when torque is released. If this occurs, re-zero wrench by momentarily pressing **POWER** button while wrench is on a stable surface with no torque applied.*

1. Turn On Wrench.

   While holding wrench still, monetarily press **POWER** button. Snap-on logo will be displayed followed by torque and angle re-zeroing screens (if angle mode has been previously selected). If real-time-clock has not been set, date and time entry screens are displayed (see Advanced Configuration section for entering date and time). After entering date and time or if time has been previously set, target TORQUE or ANGLE screen will now be displayed depending on previous measurement mode selected.

2. Select Measurement Mode.

   Toggle between target TORQUE and ANGLE screens by repeatedly pressing **ENTER** button.

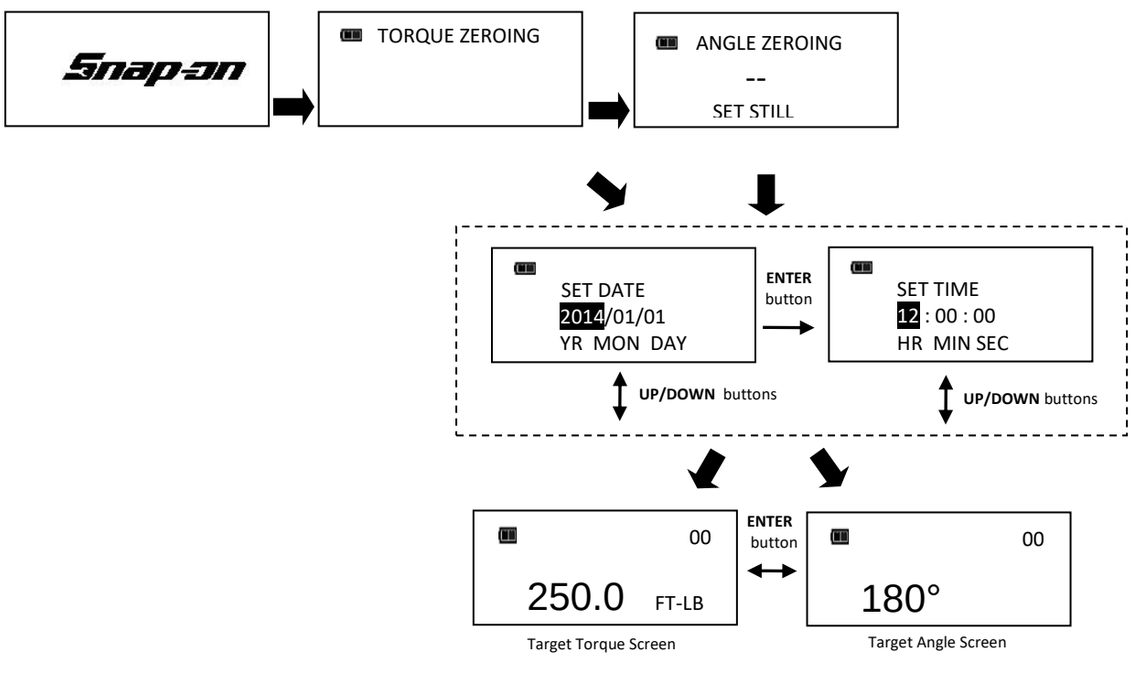

Note: When date and time is set for first time, In-Service date is also set and is used for calculating initial calibration interval (see "Setting Calibration Interval" in Advanced Configuration section).

Note: If wrench is powered up in torque only measurement mode, angle is not zeroed until mode is changed to angle measurement mode, at which time torque and angle zeroing begins automatically after 2 seconds. Wrench should be placed on a stable surface with no torque applied.

*Note: Pressing **ENTER** button while angle is zeroing will abort zeroing function to allow user to select another measurement mode.*

Torque Mode

1. Set Target.
   Use **UP/DOWN** buttons to change TORQUE target value.
2. Select Units of Measure.
   Repeatedly press **UNITS** button while on target TORQUE screen until desired units are displayed.
3. Apply TORQUE.
   Grasp center of handle and slowly apply torque to fastener until progress lights display green and a ½ second audible alert and handle vibration alerts you to stop.
4. Release TORQUE.
   Note peak TORQUE reading flashing on LCD display for 5 seconds. Pressing **BACKLIGHT** button while peak torque is flashing will continue to display value until button is released. Momentarily pressing **UP/DOWN, ENTER** or **UNITS** button will immediately return to target TORQUE screen. Reapplying TORQUE will immediately start another TORQUE measurement cycle.
5. Recall Peak TORQUE Reading
   To recall last peak TORQUE measurement, press and hold **BACKLIGHT** button for approximately 3 seconds. Peak TORQUE will flash for 5 seconds.

Angle Mode

*Note: When angle measurement mode is selected for first time following a power on, "ANGLE ZERO REQUIRED" message is displayed. After two seconds angle zero process begins and wrench must be placed on a stable surface. If **ENTER** button is pressed before two seconds to change to torque only mode, angle zero process is skipped.*

1. Set target.
   Use UP/DOWN buttons to change target ANGLE value.
2. Apply Torque and Rotate Wrench.
   Grasp center of handle and slowly apply torque to fastener and rotate wrench at a moderate consistent speed until progress lights display green and a ½ second audible alert and handle vibration alerts you to stop.
3. Release torque.
   Note alternating peak TORQUE and ANGLE readings flashing on LCD display for 5 seconds. Pressing **BACKLIGHT** button while peak values are flashing will continue to display values until button is released. Momentarily pressing **UP/DOWN, ENTER** or **UNITS** button will immediately return to target ANGLE screen. Reapplying torque (ratcheting) before target screen is displayed will continue ANGLE accumulation as wrench is rotated.
4. Recall Peak ANGLE Reading
   To recall last peak ANGLE measurement, press and hold **BACKLIGHT** button for approximately 3 seconds. Peak TORQUE and ANGLE will be displayed alternately for 5 seconds.

Mode Cycle Count

ControlTech™ mode cycle count feature is used to indicate number of times wrench has reached target torque in torque measurement mode or target angle in angle measurement mode.

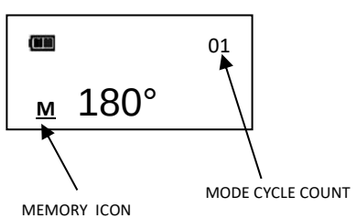

Torque and Angle Mode Cycle Counting

1. Numerical counter located in top right of target torque or target angle screen will increment after each torque or angle cycle if applied torque or angle has reached target value.
2. When toggling between torque mode or angle mode using **ENTER** button or if target is changed, numerical counter will reset back to 00. Counter WILL NOT reset when re-zeroing, on menu entry/exit or power down.
3. Memory icon will turn on ONLY when the wrench is used while the controller either out of range or turned off.

Main Menu

Main menu displays wrench operational information.

1. From target torque or angle screen, press and hold **ENTER** button for 3 seconds.
2. Use **UP/DOWN** buttons to highlight menu selection then press **ENTER** button.

   Menu Selections:
   - EXIT - Exits Main menu and returns to target screen.
   - LANGUAGE - Displays language selection menu.
   - SET HEAD LENGTH - Displays wrench head length entry screen.
   - SHOW DATA - Displays stored torque and angle data.
   - CLEAR DATA - Clears stored torque and angle data.
   - CYCLE COUNT - Displays torque/angle cycle count screen.
   - SETTINGS - Displays advanced settings menu (see Advanced Settings Section).
   - CONFIGURE - Displays advanced configuration menu (see Advanced Configuration Section).
3. To select language menu, press **ENTER** button while LANGUAGE is highlighted then highlight desired language and press **ENTER** button.
4. Decimal Mark selection menu is displayed. Decimal separator can be a comma or decimal point. Use **UP/DOWN** buttons to select decimal separator then press the **ENTER** button.

Note: Decimal separator will affect formatting of downloaded data when opened by Excel depending on Windows® regional settings.

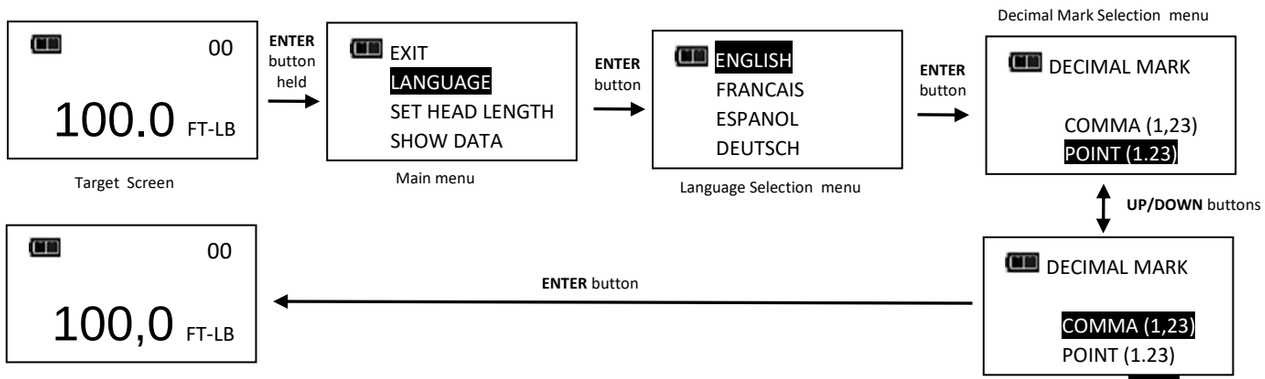

5. To exit Main menu and return to target torque or angle screen, press **ENTER** button while EXIT menu selection is highlighted.

Setting Head Length

Note: If wrench has an interchangeable head or an adapter or extension is added, length of head, adapter and/or extension being used can be entered to correct for a different length than head used to calibrate wrench, without requiring re-calibration.

1. To enter a head length, from target torque or angle screen, press and hold **ENTER** button for 3 seconds.
2. With SET HEAD LENGTH menu selection highlighted, momentarily press **ENTER** button.
3. Set Head Length screen is displayed next. Default head length is length of head at calibration (zero for fixed head wrench) and is displayed with most-significant digit highlighted. Use **UP/DOWN** buttons to increment/decrement head length. Pressing and holding **UP/DOWN** buttons will progressively increment/decrement value faster.
4. Press **ENTER** button to accept digit and highlight next-significant digit.
5. Default units of length is in inches. Press **UNITS** button to change to millimeters.
6. Pressing **ENTER** button after least-significant digit is set returns to main menu. If length is changed from default, "OFFSET IN USE" message will be displayed on target screen.

*Note: If **UP/DOWN** buttons are pressed simultaneously while on Set Head Length screen, displayed head length resets to zero or calibration head length for interchangeable head wrenches.*

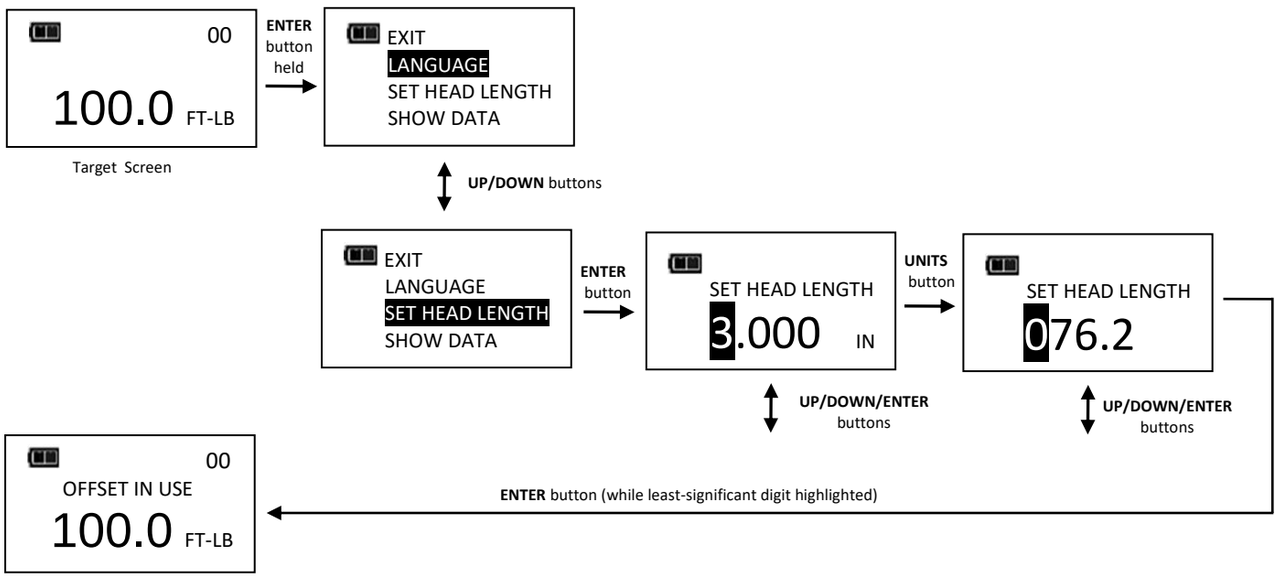

Note: For a fixed length head, head length entered is offset length measured from center of drive to center of fastener.

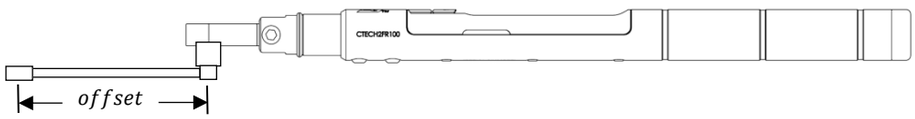

Note: For an interchangeable head, head length is measured from locking pin to center of drive. SET HEAD LENGTH is set during calibration. If a different length head is used, enter new head length and offset is calculated automatically.

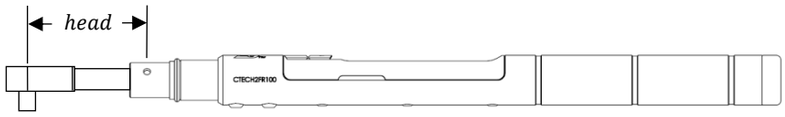

Note: For an interchangeable head with an adapter, head length entered is sum of head length and offset length.



Use of Negative Offsets

Note: Enter a negative value for offset when used in reverse direction with flex head or when calculating sum of interchangeable head and offset lengths.

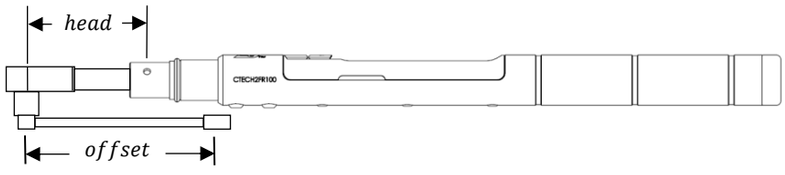

When length of an offset (or sum of head minus offset for interchangeable head) is negative, maximum fastener target is limited by following formulas:

240 in-lb wrench:

Maximum Target Torque = offset * 24 + 240

Offset	Max Target
-1"	216 in-lb
-2"	192 in-lb
-3"	168 in-lb
-4"	144 in-lb

100 ft-lb wrench:

Maximum Target Torque = offset * 7 + 100

Offset	Max Target
-1"	93 ft-lb
-2"	86 ft-lb
-3"	79 ft-lb
-4"	72 ft-lb

250 ft-lb wrench:

Maximum Target Torque = offset * 11 + 250

Offset	Max Target
-1"	239 ft-lb
-2"	228 ft-lb
-3"	217 ft-lb
-4"	206 ft-lb

250L ft-lb wrench:

Maximum Target Torque = offset * 8 + 250

Offset	Max Target
-1"	242 ft-lb
-2"	234 ft-lb
-3"	226 ft-lb
-4"	218 ft-lb

600 ft-lb wrench:

Maximum Target Torque = offset * 14 + 600

Offset	Max Target
-1"	586 ft-lb
-2"	572 ft-lb
-3"	558 ft-lb
-4"	544 ft-lb

Note: When using a negative offset, entering a target torque greater than maximum values above may cause an overtorque error before reaching fastener target torque and possibly damage wrench.

Viewing Stored Torque and Angle Data

Torque data is stored in memory after each torque cycle if applied torque has reached target value. Torque and angle data is stored in memory after each angle cycle if applied angle has reached target value. Memory Indicator is displayed when data is stored in non-volatile memory.

1. To view stored torque and angle data, the CTECH will only store data while the controller is either out of range or turned off.
2. Highlight SHOW DATA menu selection by pressing **UP/DOWN** buttons then press **ENTER** button to display Show Data screen.
3. In Show Data screen, scroll through each stored data record by pressing **UP/DOWN** buttons.
   Example: 0002 = Show Data List Counter: TQ = Peak torque value
   0001 = Show Data List Counter: TQ = Peak torque value: ANG = Peak angle value
4. Pressing **ENTER** button while on Show Data screen returns to main menu.

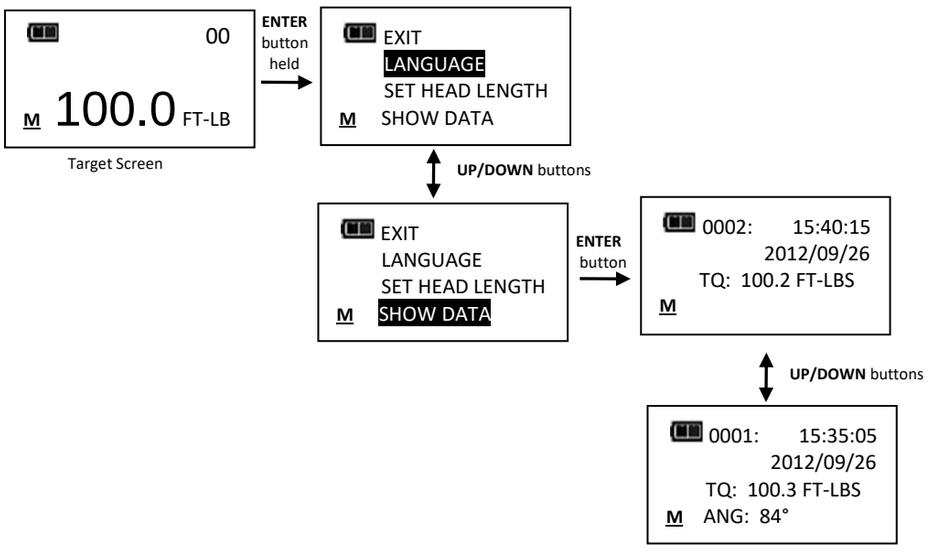

Note: A maximum of 1500 data records can be stored in memory. Memory full icon will be displayed when full and no more data is stored until memory is cleared.

Deleting Stored Torque and Angle Data

1. From target torque or angle screen, press and hold **ENTER** button for 3 seconds.
2. Highlight CLEAR DATA menu selection using **UP/DOWN** buttons then press **ENTER** button to display CLEAR ALL DATA screen.
3. In CLEAR ALL DATA screen, highlight YES menu selection to delete all stored data, or NO menu selection to exit without deleting data.
4. Press **ENTER** button after making selection.

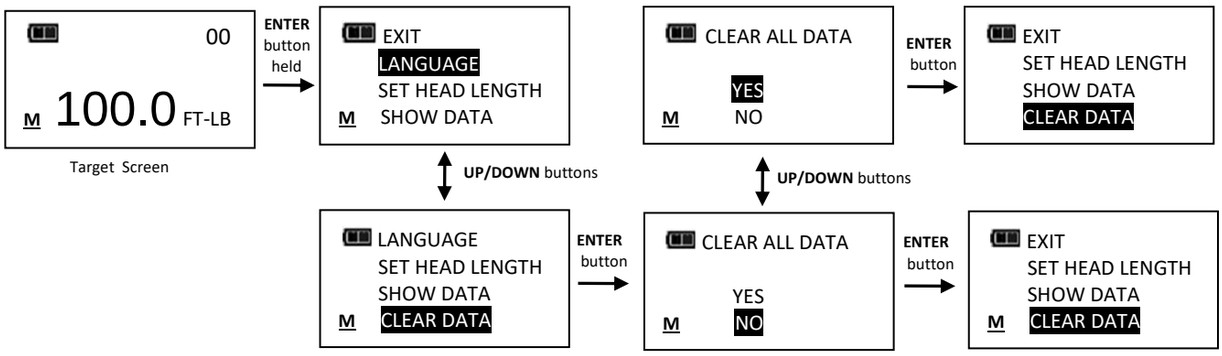

Note: If wrench is Locked (see Preset Lock in Advanced section), Clear Data function is disabled.

Viewing and Clearing Wrench Cycle Counter

Each time torque or angle target is reached, wrench cycle counter is incremented. Maximum cycle count is 999999.

1. From target torque or angle screen, press and hold **ENTER** button for 3 seconds.
2. Highlight CYCLE COUNT menu selection using **UP/DOWN** buttons.
3. Press **ENTER** button to display CYCLE COUNT screen.
4. To exit CYCLE COUNT screen without clearing count, press **ENTER** button while EXIT menu selection is highlighted.
5. To reset wrench cycle count to 0, highlight CLEAR menu selection then press **ENTER** button.
6. EXIT menu selection is automatically highlighted after count is cleared. Press **ENTER** button to return to main menu.

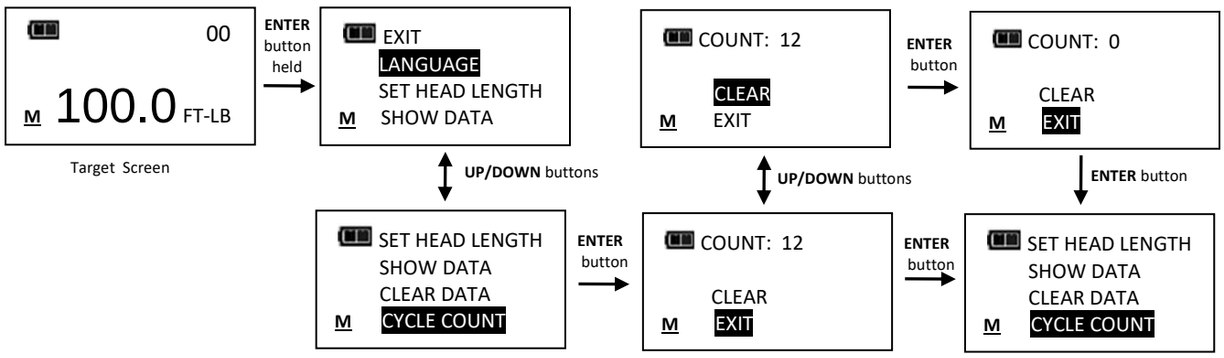

Note: If wrench is Locked (see Preset Lock in Advanced section) Clear count function is disabled.

Target Presets (PSET)

PSET function gives user ability to configure 50 preset target torque or target angle settings, each with a target, minimum, maximum (over range) and batch count value. PSETs are stored in non-volatile memory so that they are retained while power is off.

*Note: After adding a Preset (see below), navigate between manual target torque, angle mode and PSET screen by repeatedly pressing **ENTER** button. While PSET screen is displayed, press **UP/DOWN** buttons to select additional configured PSETs.*

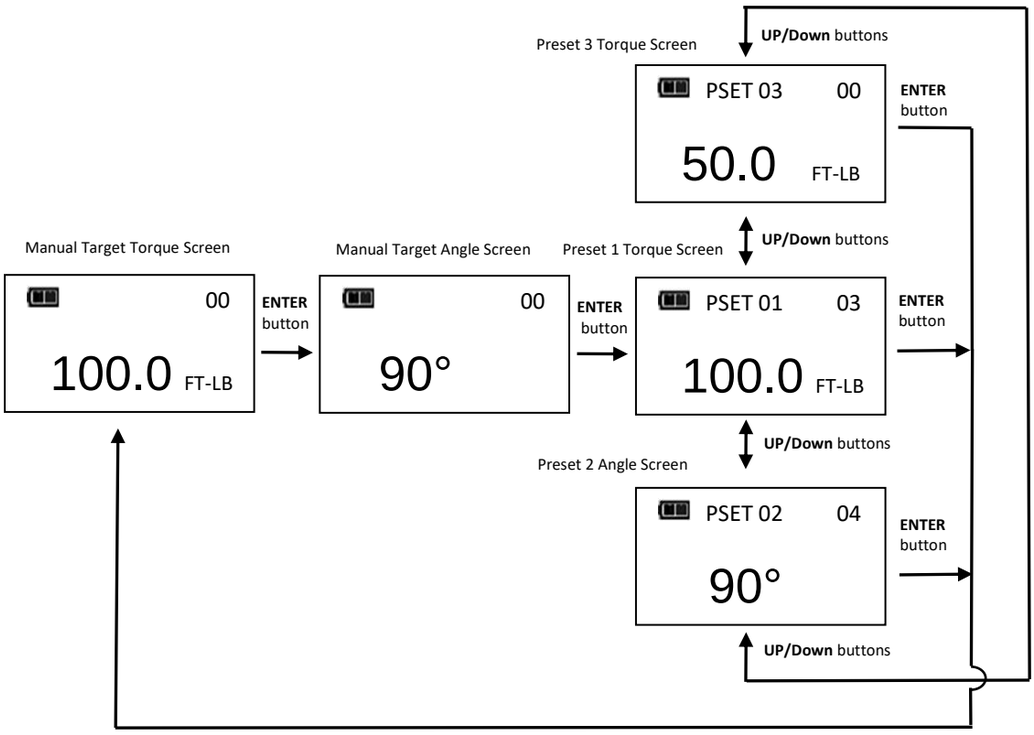

Adding a Torque Preset

1. From manual target torque screen, select units of measure.
2. Press and hold **UNITS** button for 3 seconds.
3. ADD PRESET confirmation screen is displayed. Highlight YES menu selection using **UP/DOWN** buttons then press **ENTER** button**.** NO menu selection returns to main menu without adding a PSET.
4. TARGET TORQUE screen is displayed. TARGET TORQUE is target value of fastener. Initial TARGET TORQUE value is value from target torque screen. TARGET TORQUE can be set to any value within wrench torque range by pressing **UP/DOWN** buttons. Once desired target torque value has been set, press **ENTER** button**.**
5. MINIMUM TORQUE screen is displayed. MINIMUM TORQUE is value at which green progress lights, audible alert and vibrator turn on. Initial MINIMUM TORQUE value is TARGET TORQUE value minus negative torque tolerance (default 0%, see MODE SETUP in Advanced Configuration section). MINIMUM TORQUE can be set to any value from TARGET TORQUE to wrench minimum torque range by pressing **UP/DOWN** buttons. Once desired minimum torque value has been set, press **ENTER** button**.**
6. MAXIMUM TORQUE screen is displayed next. MAXIMUM TORQUE is torque value above which red progress lights turn on. Initial MAXIMUM TORQUE value will be TARGET TORQUE value plus positive torque tolerance (default 4%, see MODE SETUP in Advanced Configuration section). Maximum torque value can be set greater than TARGET TORQUE value to 10% above wrench maximum range by pressing **UP/DOWN** buttons. Once desired maximum torque value has been set, press **ENTER** button**.**
7. BATCH COUNT screen is displayed next. Default value is zero. Batch count range is 0 to 99. Press **UP/DOWN** buttons to increment/decrement batch count. Mode Count increments each time target torque is reached if a batch count of zero is entered. Mode Count decrements if a non-zero batch count is entered and resets to batch count value when count reaches zero. Once desired batch count value has been set, press **ENTER** button**.**
8. PSET target screen is displayed labeled with next available PSET number from 01 to 50.
9. To enter additional torque presets, repeatedly press **ENTER** button until target torque screen is displayed and repeat steps above.

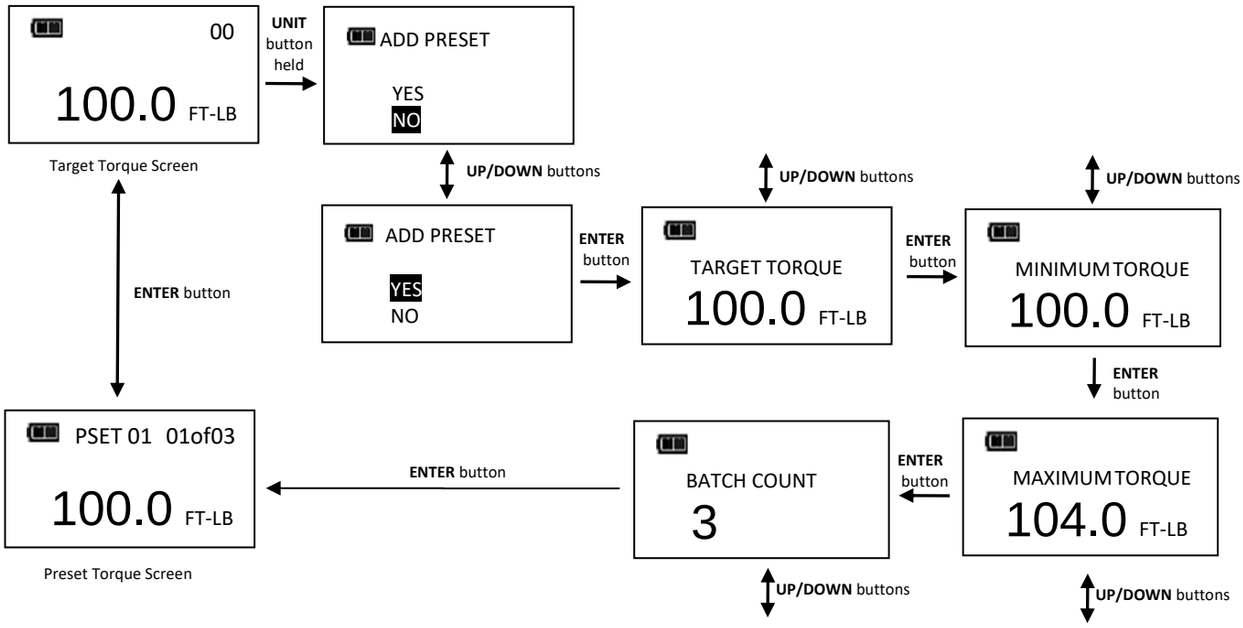

Adding an Angle Preset

1. From manual target angle screen, press and hold **UNITS** button for 3 seconds.
2. ADD PRESET confirmation screen is displayed. Highlight YES menu selection using **UP/DOWN** buttons then press **ENTER** button**.** NO menu selection returns to main menu without adding a PSET.
3. TARGET ANGLE screen is displayed. TARGET ANGLE is fastener rotational angle target value. Initial TARGET ANGLE value is value from target angle screen. TARGET ANGLE can be set from 0 to 360° by pressing **UP/DOWN** buttons. Once desired target angle value has been set, press **ENTER** button**.**
4. MINIMUM ANGLE screen is displayed. MINIMUM ANGLE is value at which green progress lights, audible alert and vibrator turn on. Initial MINIMUM ANGLE value is TARGET ANGLE minus negative angle tolerance (default 0%, see MODE SETUP in Advanced Configuration section). MINIMUM ANGLE can be set from 0 to TARGET ANGLE by pressing **UP/DOWN** buttons. Once desired minimum angle value has been set, press **ENTER** button**.**
5. MAXMUM ANGLE screen is displayed next. MAXIMUM ANGLE is angle value above which red progress lights turn on. Initial MAXIMUM ANGLE value will be TARGET ANGLE plus positive angle tolerance (default 4%, see MODE SETUP in Advanced Configuration section). MAXIMUM ANGLE value can be set to any value greater than TARGET ANGLE by pressing **UP/DOWN** buttons. Once desired value has been set, press **ENTER** button**.**
6. BATCH COUNT screen is displayed next. Default value is zero. Batch count range is 0 to 99. Press **UP/DOWN** buttons to increment/decrement batch count. Mode Count increments each time target angle is reached if a batch count of zero is entered. Mode Count decrements if a non-zero batch count is entered and resets to batch count value when count reaches zero. Once desired batch count value has been set, press **ENTER** button**.**
7. PSET target screen is displayed labeled with next available PSET number from 01 to 50.
8. To enter additional angle presets, repeatedly press **ENTER** button until target angle screen is displayed and repeat steps above.

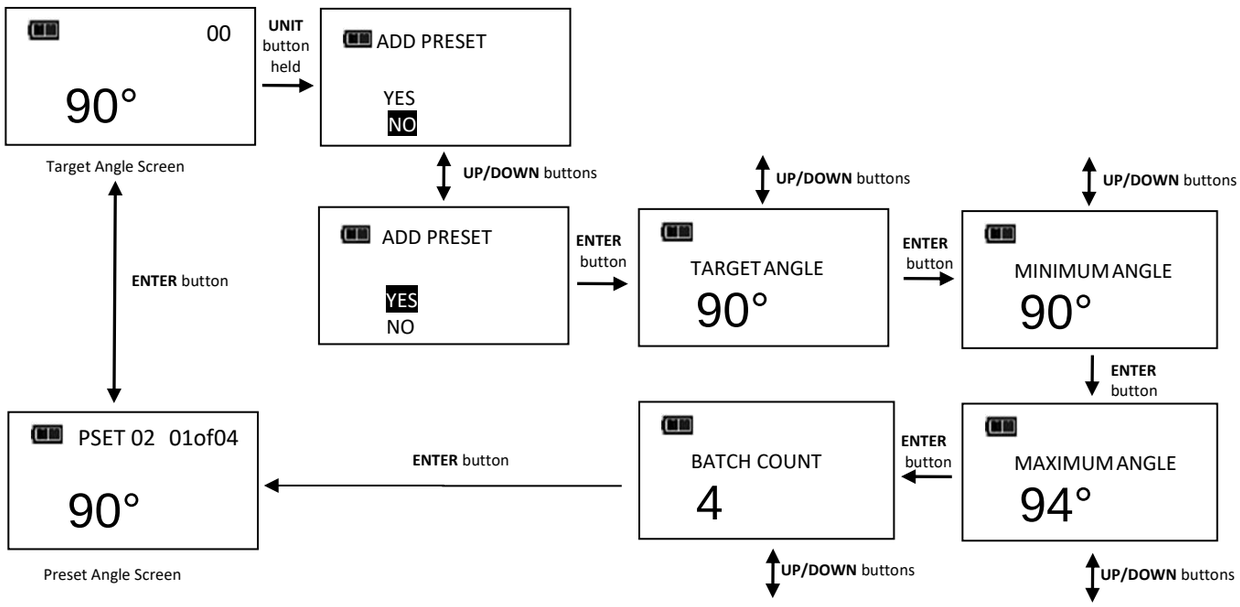

Editing a Preset

Edit PSET function gives user ability to edit stored PSETS on wrench.

1. From Preset screen to be edited, press and hold **UNITS** button for 3 seconds.
2. CHANGE PRESET screen is displayed.
3. Highlight EDIT selection using **UP/DOWN** buttons then press **ENTER** button.
4. **TARGET** TORQUE or TARGET ANGLE screen is displayed. Value can be changed by pressing **UP/DOWN** buttons. Once desired target torque or angle value has been set, press **ENTER** button**.**
5. MINIMUM TORQUE or MINIMUM ANGLE screen is displayed. Value can be changed by pressing **UP/DOWN** buttons. Once desired torque or angle value has been set, press **ENTER** button**.**
6. MAXMUM TORQUE or MAXMUM ANGLE screen is displayed next. Value can be changed by pressing **UP/DOWN** buttons. Once desired torque or angle value has been set, press **ENTER** button**.**

7. BATCH COUNT screen is displayed next. Value can be changed by pressing **UP/DOWN** buttons. Once desired batch count value has been set, press **ENTER** button**.**
8. PSET target screen is displayed labeled with same PSET number.

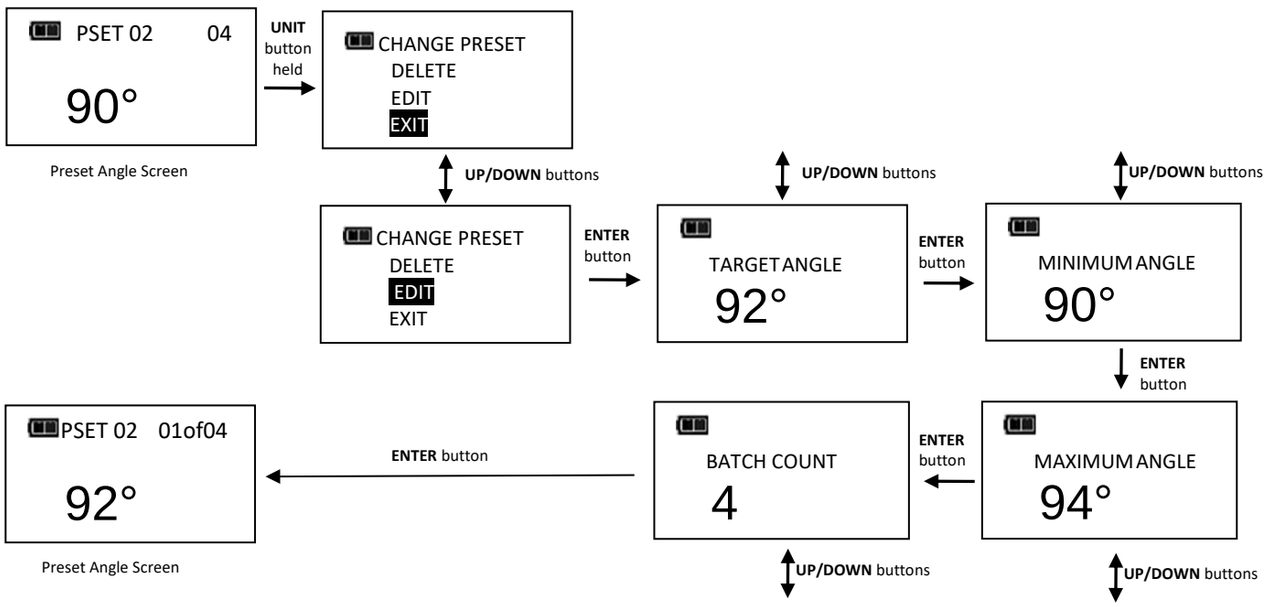

*Note: Pressing **ENTER** button while* EXIT *menu selection is highlighted will exit without editing PSET.*

Deleting a Preset

Delete PSET function allows user to remove stored presets from wrench.

1. From Preset screen to be deleted, press and hold **UNITS** button for 3 seconds.
2. CHANGE PRESET screen is displayed.
3. Highlight DELETE menu selection using **UP/DOWN** buttons and press **ENTER** button**.**
4. Target screen is displayed and deleted PSET is no longer available for selection.

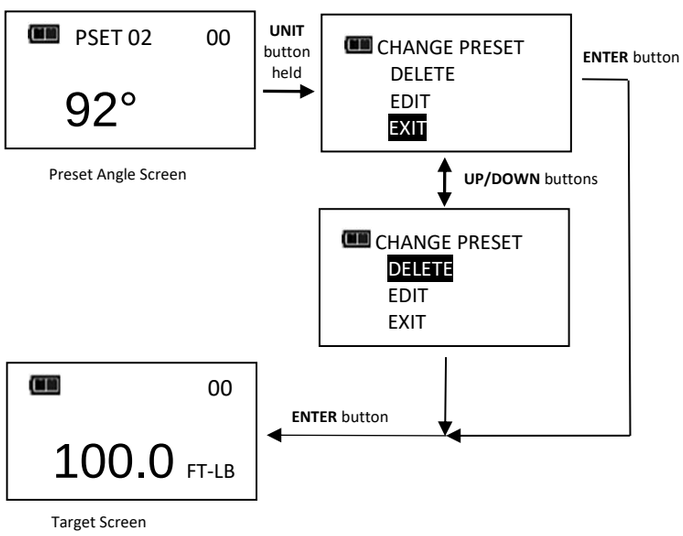

*Note: Pressing **ENTER** button while* EXIT *menu selection is highlighted will exit without deleting PSET.*

Note: When a PSET is deleted, all other stored PSET's will retain their original PSET numbers. When a new PSET is entered, it will be assigned first available PSET number in sequence.

- Advanced Settings

Accessing Advanced Settings

Advanced settings are accessed from SETTINGS menu selection on main menu.

1. From target torque or angle screen, press and hold **ENTER** button for 3 seconds.
2. Highlight SETTINGS menu selection using **UP/DOWN** buttons.
3. Press **ENTER** button to display Settings menu.

   Menu Selections:

   - EXIT - Exits Settings menu and returns to target screen.
   - SHOW INFO - Displays wrench operational information.
   - SLEEP TIME - Displays power down interval setup screen.
   - LCD CONTRAST - Displays LCD contrast setup screen.
   - KEY BEEP - Displays button press beep enable/disable setup screen.
   - AUTO BACKLIGHT - Displays auto backlight enable/disable screen to turn on backlight during measurement.
   - TOGGLE BACKLGHT - Displays B**ACKLIGHT** button toggle or timeout enable/disable screen.
   - VIBRATOR CONFIG - Displays vibrator ON/OFF configuration for when target reached.
4. To exit Settings menu and return to target torque or angle screen, press **ENTER** button while EXIT menu selection is highlighted.

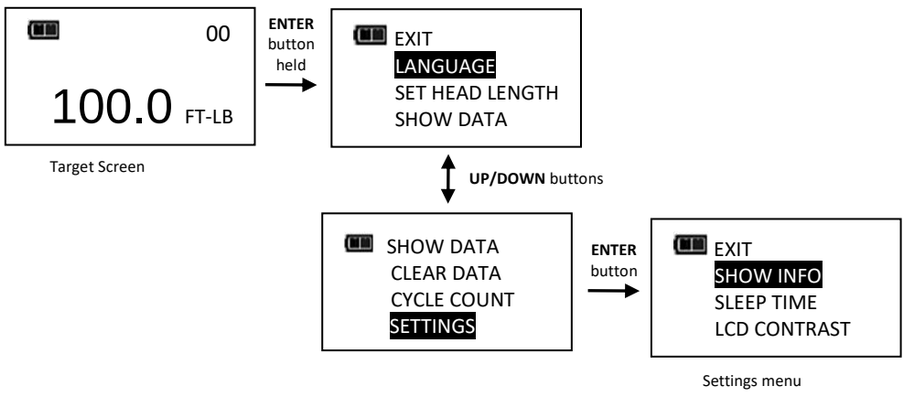

Note: All user configurable settings are stored in non-volatile memory and are retained while power is off.

Show Info

Show Info menu selection displays wrench operational information.

1. From Settings menu, press **ENTER** button while SHOW INFO selection is highlighted.
2. SHOW INFO screen is displayed.
3. **UP/DOWN** buttons are used to scroll screen.

   Operational Information:

   - SN: Serial number assigned to wrench.
   - CAL: Date of last wrench calibration.
   - ISD: In-Service Date.
   - TCF: Torque Calibration Factor.
   - ACF: Angle Calibration Factor.
   - VER: Software version.
   - OVR CNT: Overtorque Counter tracks how many times an over-torque event occurred on wrench (torque >125% of full scale).
   - TQZ: Torque Zero Offset.
   - ANZ: Angle Zero Offset.
4. Pressing **ENTER** button exits Show Info screen and returns to Settings menu.

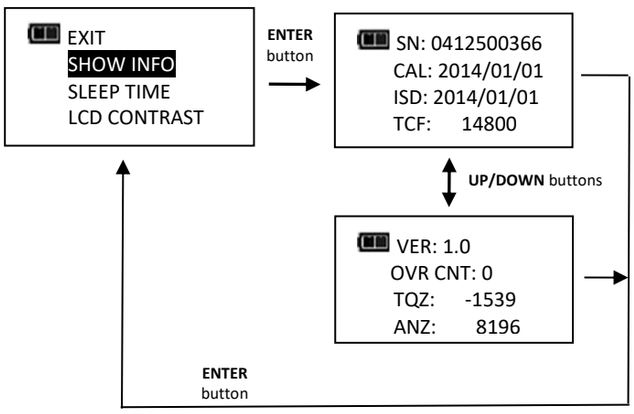

Setting Sleep Time

This function will allow user to set interval wrench enters power-down state following last applied torque or button press.

1. From Settings menu, use **UP/DOWN** buttons to highlight SLEEP TIME selection then press **ENTER** button.
2. SLEEP TIME screen is displayed.
3. Use **UP/DOWN** buttons to select sleep interval.

   Selectable Intervals:

   - 2 MIN (factory default)
   - 5 MIN
   - 10 MIN
   - 30 MIN
   - 1 HR
   - 2 HR
   - 8 HR
4. Press **ENTER** button to accept selection and exit to Settings menu.

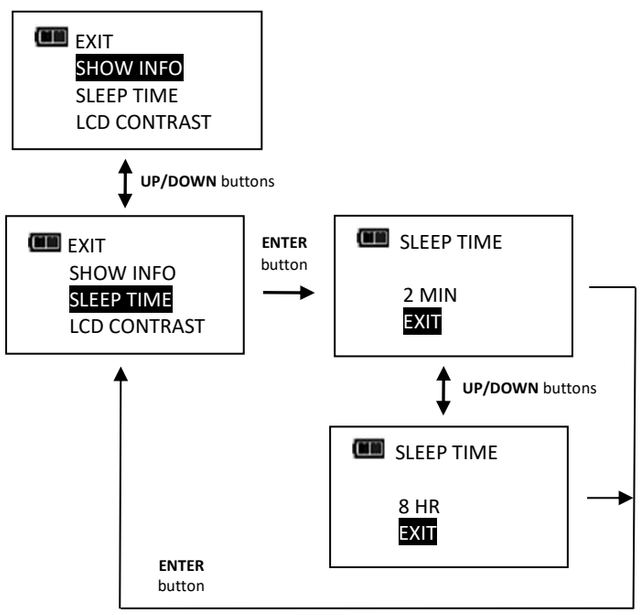

Setting LCD Contrast

This function will allow user to set LCD contrast for optimal viewing.

1. From Settings menu, use **UP/DOWN** buttons to highlight LCD CONTRAST selection then press **ENTER** button.
2. CONTRAST screen is displayed.
3. Use **UP/DOWN** buttons while viewing display to change contrast to desired level.
   Selectable levels: 20 to 80 in increments of 5 (factory default = 40).
4. Press **ENTER** button to accept selection and exit to Settings menu.

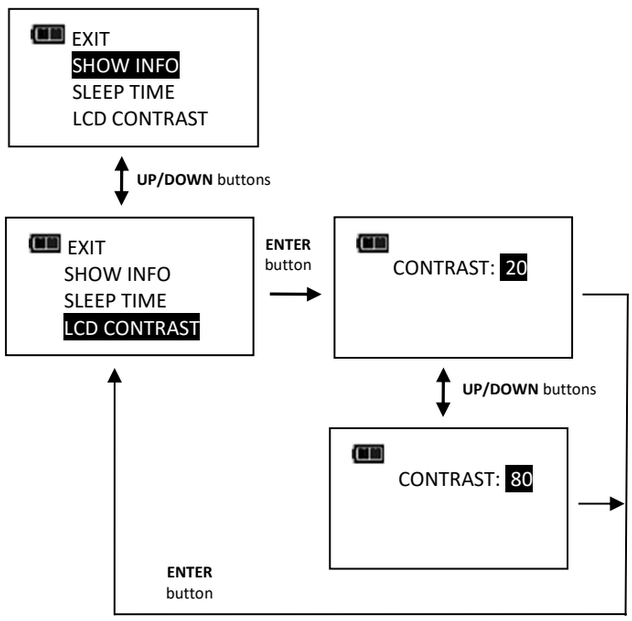

Key Beep Setup

This function will allow user to enable or disable audio feedback when a button is pressed.

1. From Settings menu, use **UP/DOWN** buttons to highlight KEY BEEP selection then press **ENTER** button.
2. KEY BEEP screen is displayed.
3. Use **UP/DOWN** buttons to highlight ENABLE (factory default) or DISABLE selection.
4. Press **ENTER** button to accept selection and exit to Settings menu.

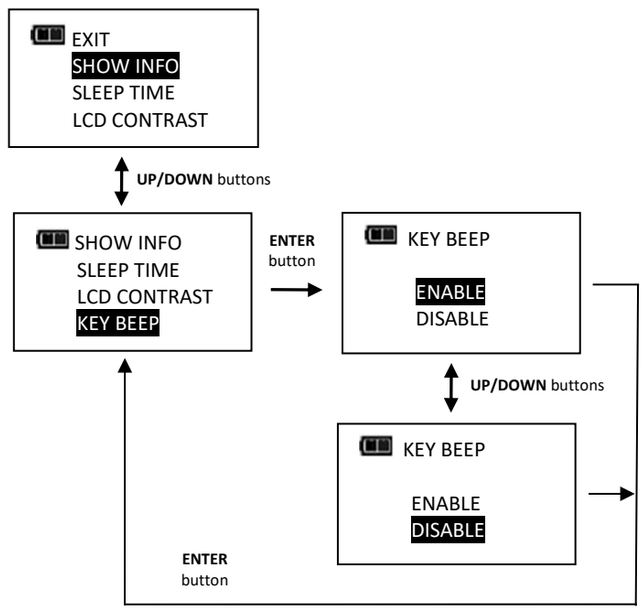

Auto Backlight Setup

This function will allow user to enable or disable backlight from turning on during torque or angle measurement.

1. From Settings menu, use **UP/DOWN** buttons to highlight AUTO BACKLIGHT selection then press **ENTER** button.
2. AUTO BACKLIGHT screen is displayed.
3. Use **UP/DOWN** buttons to highlight ENABLE (factory default) or DISABLE selection.
4. Press **ENTER** button to accept selection and exit to Settings menu.

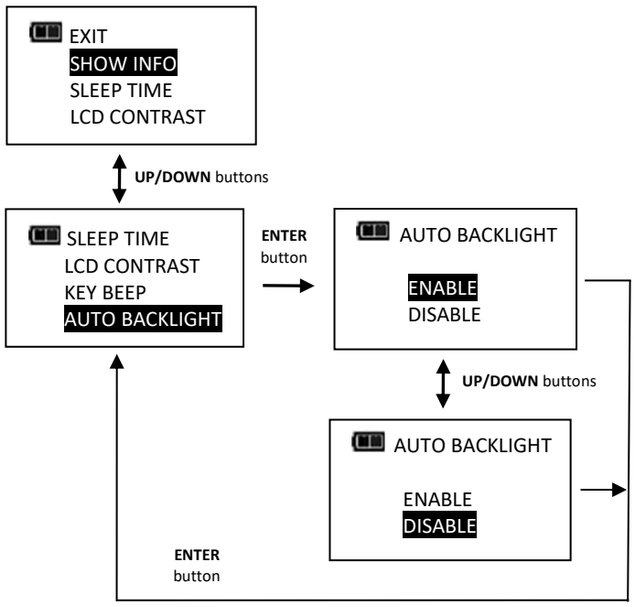

Toggle Backlight Setup

This function will allow user to enable or disable backlight toggle function. If toggle mode is disabled, **BACKLIGHT** button turns on backlight and it automatically turns off after five seconds following any last button press. If toggle mode is enabled, a **BACKLIGHT** button press will turn on backlight and it will remain on until next **BACKLIGHT** button press.

1. From Settings menu, use **UP/DOWN** buttons to highlight TOGGLE BACKLGHT selection then press **ENTER** button.
2. TOGGLE BACKLGHT screen is displayed.
3. Use **UP/DOWN** buttons to highlight ENABLE or DISABLE (factory default) selection.
4. Press **ENTER** button to accept selection and exit to Settings menu.

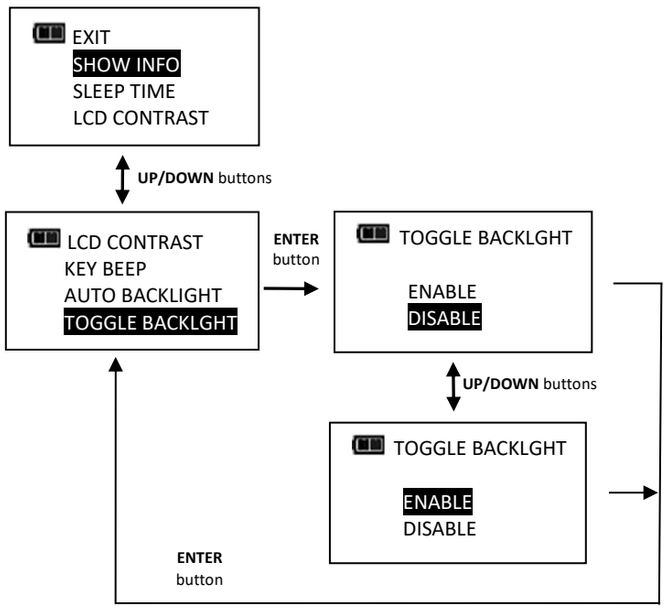

*Note: Backlight will turn off when wrench powers down either by **POWER** button press or sleep time.Note: If toggle backlight is enabled and backlight is on, backlight will remain on during and after applying torque.*

Vibrator Configuration

This function will allow user to configure vibrator for On or Off when target is reached for preference and/or battery power savings.

1. From Settings menu, use **UP ▲/DOWN ▼** buttons to highlight VIBRATOR CONFIG selection then press **ENTER ↵** button.
2. VIBRATOR CONFIG screen is displayed.
3. Use **UP ▲/DOWN ▼** buttons to toggle ON or OFF selection.
4. Press **ENTER ↵** button to accept selection and exit to Settings menu.

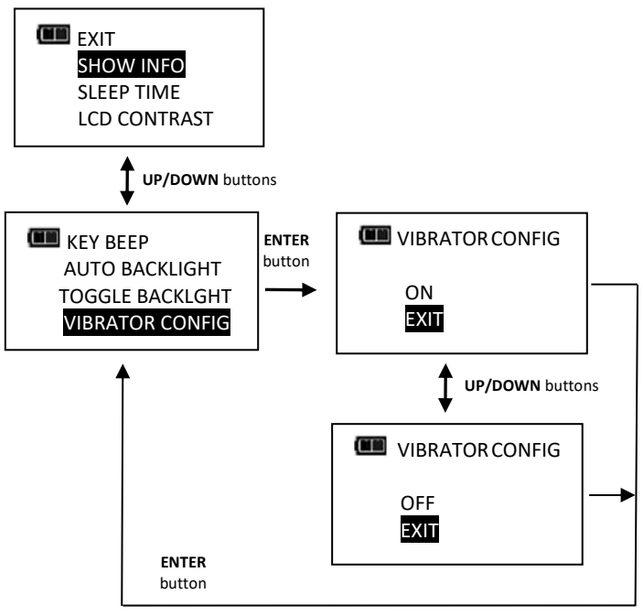

- Advanced Configuration

Accessing Advanced Configuration

Advanced configuration is accessed from CONFIGURE menu selection on main menu.

Note: If wrench has been locked (see Preset Lock and Job Mode), a password entry is required to enter Configure menu.

1. From target torque or angle screen, press and hold **ENTER** button for 3 seconds.
2. Highlight CONFIGURE menu selection using **UP/DOWN** buttons.
3. Press **ENTER** button to display Configure menu.

   Menu Selections:

   - EXIT - Exits Configure menu and returns to target torque or angle screen.
   - MODE SETUP - Displays instrument mode setup menu.
   - PRESET LOCK - Displays Preset lock menu.
   - DELETE PRESETS - Displays delete all presets menu.
   - JOB MODE - Displays Job mode menu.
   - CALIBRATION - Displays instrument calibration menu (password protected).
   - SET DATE/TIME - Displays clock date and time entry screens.
   - SET CAL INTRVAL - Displays calibration interval setup screen (requires clock date and time setup).
   - CHANGE PASSWD - Displays change password menu.
4. To exit Configure menu and return to target torque or angle screen, press **ENTER** button while EXIT menu selection is highlighted.

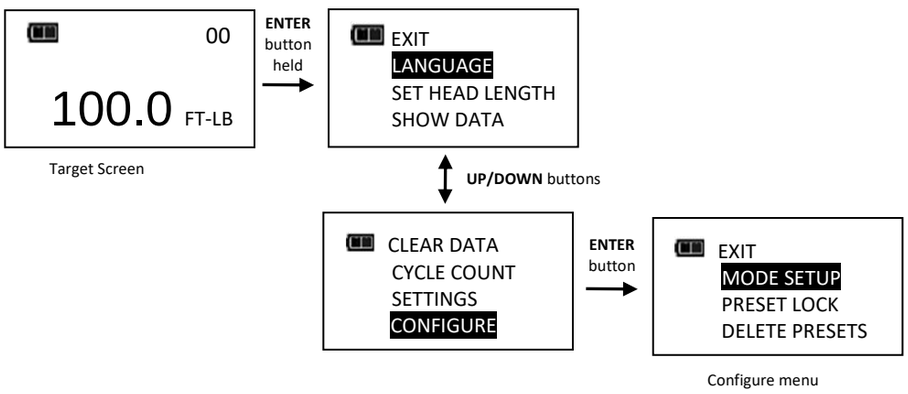

Note: All user configurable settings are stored in non-volatile memory and are retained while power is off.

Mode Setup

Mode setup menu allows user configure target torque and angle minus and plus tolerances and enable/disable Torque THEN Angle mode and Torque AND angle mode.

1. From Configure menu, press **ENTER** button while MODE SETUP selection is highlighted.
2. Mode Setup menu is displayed.

   Menu Selections:

   - EXIT - Exits Mode setup menu and returns to Configure menu screen.
   - TQ-% SETUP - Displays target torque minus tolerance entry screen.
   - TQ+% SETUP - Displays target torque plus tolerance entry screen.
   - ANG-% SETUP - Displays target torque minus tolerance entry screen.
   - ANG+% SETUP - Displays target torque plus tolerance entry screen.
   - THEN DISABLED - Displays THEN Mode enable/disable screen.
   - AND DISABLED - Displays AND Mode enable/disable screen.
3. Use **UP/DOWN** buttons to highlight menu selections.
4. Press **ENTER** button while EXIT menu selection is highlighted to return to Configure menu.

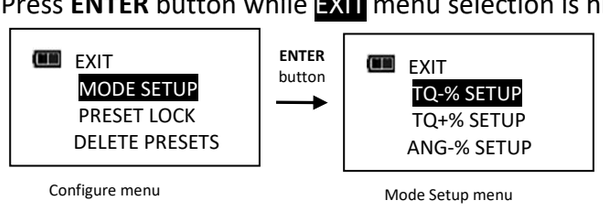

Setting Target Tolerances

This function will allow user to set plus and minus tolerances for torque and angle targets.

Note: These tolerances are used for manual modes only. Preset tolerances are defined by Minimum and Maximum values.

1. From Mode Setup menu, use **UP/DOWN** buttons to highlight tolerance selection to setup (TQ-%, TQ+%, ANG-% ANG+%) then press **ENTER** button.
2. Tolerance screen is displayed.
3. Use **UP/DOWN** buttons to change tolerance value. Range is 0 to 10% (factory default for minus tolerance is 0% and 4% for plus tolerance).
4. Press **ENTER** button to accept selection and exit to Mode Setup menu.

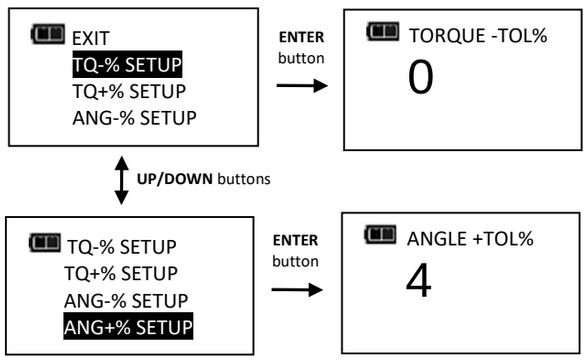

Note: Green progress lights turn on at target minus -% TOL.

Note: Red progress lights turn on above target plus +% TOL.

Note: Plus tolerance is added to minimum Preset value to define initial maximum value when a Preset is first added.

Enable/Disable Torque THEN Angle Mode

This function will allow user to enable or disable Torque THEN Mode.

1. From Mode Setup menu, use **UP/DOWN** buttons to highlight THEN DISABLED (factory default) selection then press **ENTER** button.
2. TQ THEN ANGLE enable/disable screen is displayed.
3. Use **UP/DOWN** buttons to select ENABLE or DISABLE selection.
4. Press **ENTER** button to accept selection and exit to Mode Setup menu.

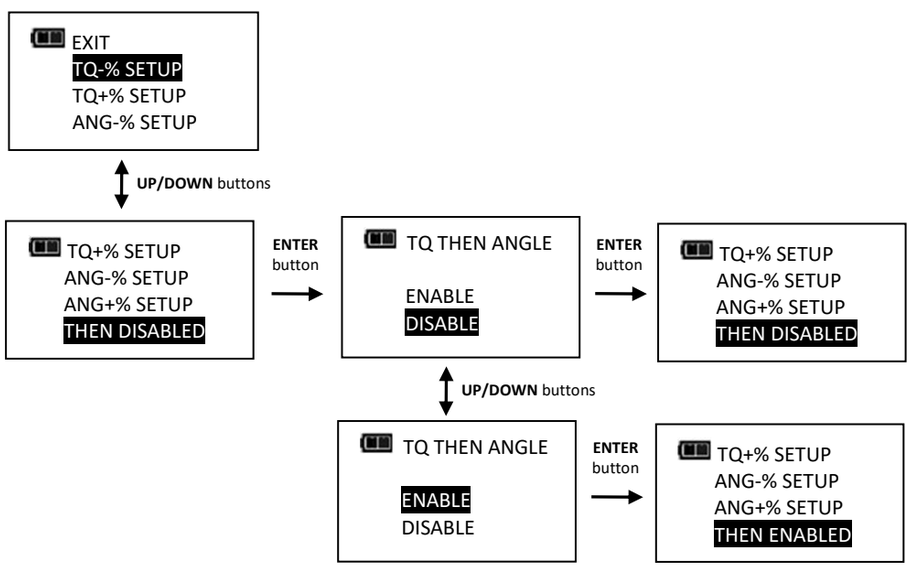

Note: Menu selection indicates current configuration (ENABLED or DISABLED).

Torque THEN Angle Mode

Torque THEN Angle mode is setup by first setting a target torque and units then a target angle before selecting Torque THEN Angle mode. In Torque THEN Angle mode, when applied torque reaches target torque, wrench automatically switches to angle mode for angle measurement. Progress lights indicate applied torque progress while torque is measured and angle when angle is measured. If torque is below target torque when angle reaches target angle, green progress lights will not turn on and if angle exceeds maximum angle, red progress lights turn on indicating a potential problem with fastener.

1. From target torque screen, use **UP/DOWN** buttons to set target torque and **UNITS** button to select torque measurement units then press **ENTER** button.
2. Angle target screen is displayed. Use **UP/DOWN** buttons to set target angle then press **ENTER** button.
3. Torque THEN Angle mode screen is displayed.
4. Apply torque until target is reached then rotate wrench to target angle.

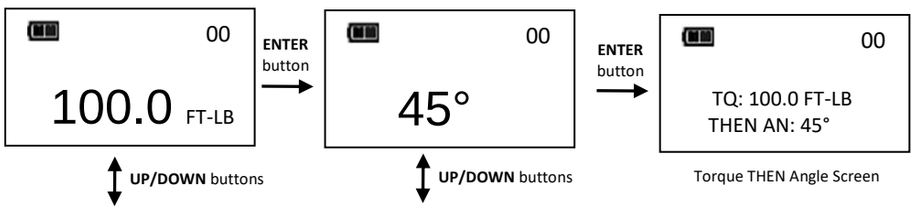

*Note: **UNITS** button can be used to select torque units while on Torque THEN Angle screen.*

Note: Torque cycle is not recorded in memory unless both torque and angle reach targets.

Note: Red progress lights turn on if torque exceeds 110% of wrench full scale or if angle exceeds target + plus tolerance while in manual mode.

Note: Torque THEN Angle Presets are entered by pressing and holding Units button while on Torque THEN Angle screen. MAXIMUM TORQUE defaults to full range plus 10%. Refer to "Adding a Torque Preset" and "Adding an Angle Preset" in Basic section for parameter entry.

Enable/Disable Torque AND Angle Mode

This function will allow user to enable or disable Torque AND Mode.

1. From Mode Setup menu, use **UP/DOWN** buttons to highlight AND DISABLED (factory default) selection then press **ENTER** button.
2. TQ AND ANGLE enable/disable screen is displayed.
3. Use **UP/DOWN** buttons to select ENABLE or DISABLE selection.
4. Press **ENTER** button to accept selection and exit to Mode Setup menu.

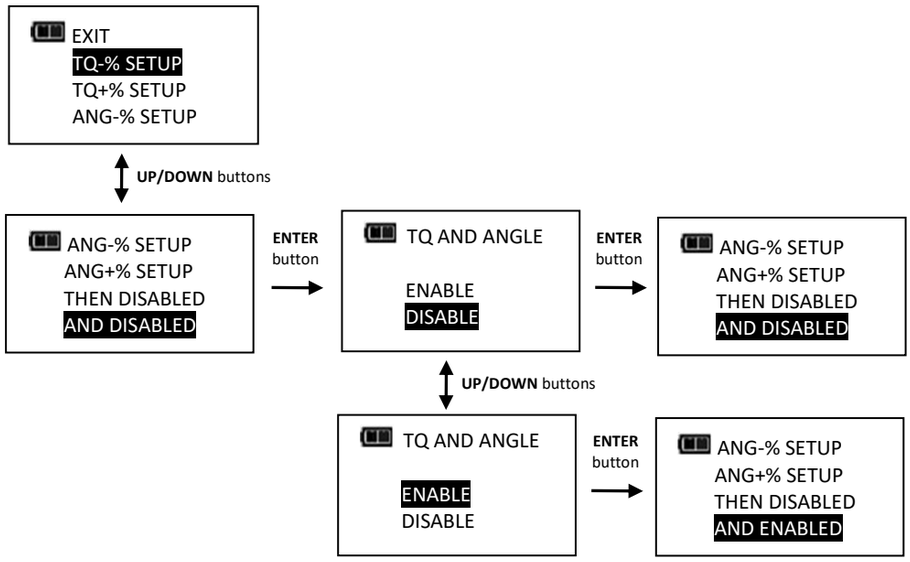

Note: Menu selection indicates current configuration (ENABLED or DISABLED).

Torque AND Angle Mode

Torque AND Angle mode is setup by first setting a target torque and units then a target angle before selecting Torque AND Angle mode. In Torque AND Angle mode, torque and angle are measured simultaneously. Yellow progress lights track torque measurement. When both torque and angle reach their targets, green progress lights turn on and torque and angle data record is stored. If either of measurements exceed their upper tolerance, red progress lights turn on.

1. From target torque screen, use **UP/DOWN** buttons to set target torque and **UNITS** button to select torque measurement units then press **ENTER** button.
2. Angle target screen is displayed. Use **UP/DOWN** buttons to set target angle then press **ENTER** button until Torque AND Angle mode screen is displayed.
3. Apply torque and rotate wrench until both targets are reached.

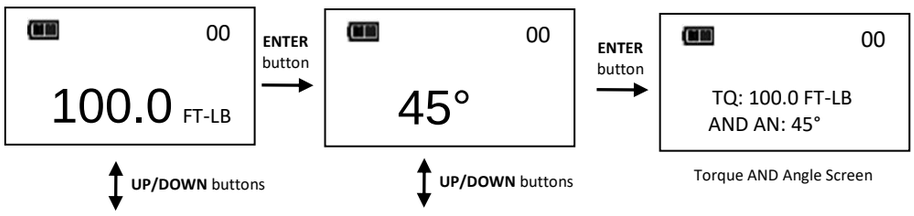

*Note: **UNITS** button can be used to select torque units while on Torque AND Angle screen.*

Note: Torque THEN Angle Presets are entered by pressing and holding Units button while on Torque THEN Angle screen. Refer to "Adding a Torque Preset" and "Adding an Angle Preset" in Basic section for parameter entry.

Note: Torque cycle is not recorded in memory unless both torque and angle reach targets.

Note: Red progress lights turn on if torque exceeds target + plus tolerance or if angle exceeds target + plus tolerance while in manual mode.

Note: Red progress lights turn on if torque exceeds maximum torque or if angle exceeds maximum angle in Preset mode.

Preset Lock Report Mode Only

Preset Lock function allows user to lock wrench so that only configured presets are accessible. No other presets can be configured and manual target torque and angle modes are not accessible when locked.

Note: Password entry is required to enable Preset Lock. When locked, password entry is required to re-enter Configure menu (refer to ControlTech™ Calibration manual for default password).

1. From Configure menu, use **UP/DOWN** buttons to highlight PRESET LOCK selection then press **ENTER** button.
2. Preset Lock enable/disable screen is displayed.
3. Use **UP/DOWN** buttons to select LOCK or UNLOCK selection.
4. Press **ENTER** button to accept selection and exit to Configure menu.

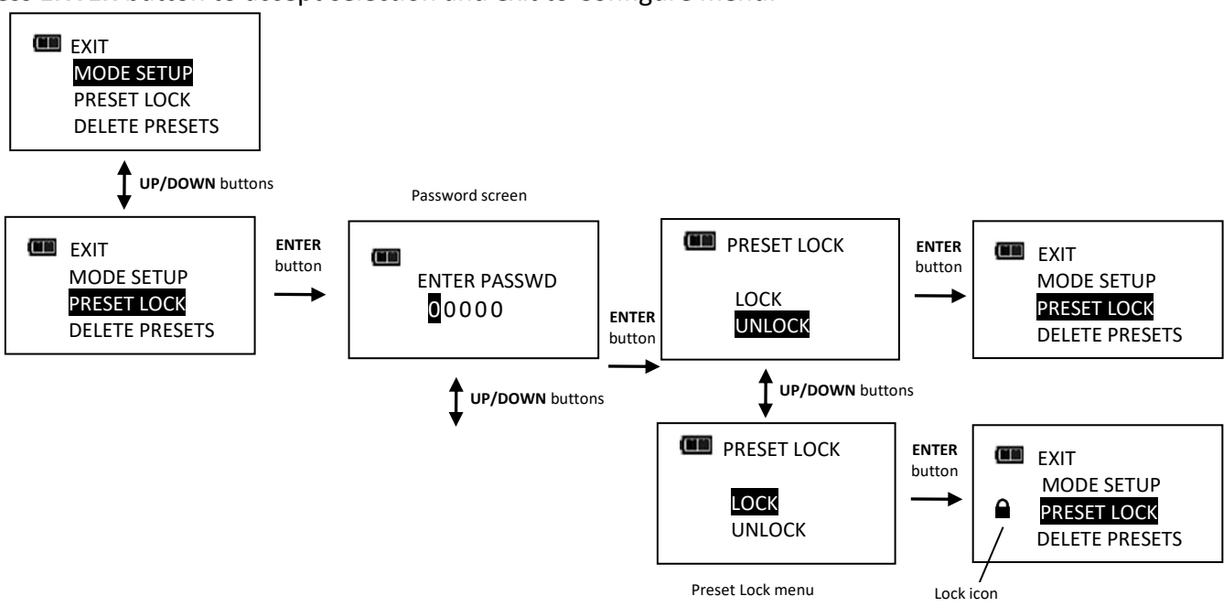

Note: If LOCK is selected without a Preset configured, following screen is displayed:

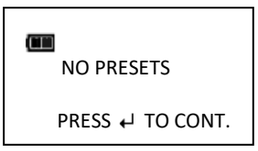

Note: When Preset Lock is enabled, Clear Memory function is disabled and displays following Locked message if attempted:

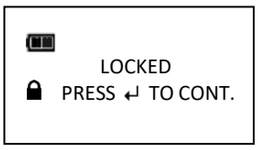

Note: When Preset Lock is enabled, Clear Cycle count function is disabled and displays Locked message if attempted.

Preset Unlock

When Preset Lock is enabled, a password is required to access Configure menu. Refer to ControlTech™ Calibration Manual for Configure password.

1. From target torque or angle screen, press and hold **ENTER** button for 3 seconds.
2. Highlight CONFIGURE menu selection using **UP/DOWN** buttons.
3. Press **ENTER** button to display Password screen.
4. Follow password entry procedure found in ControlTech™ Calibration manual.

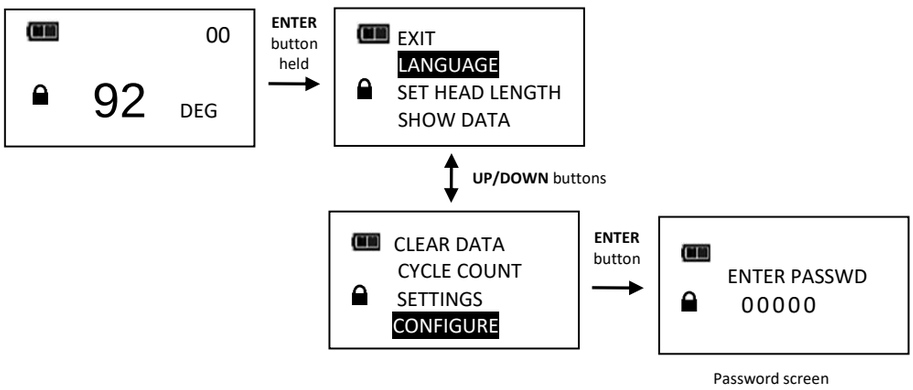

Delete Presets

Delete Presets function allows user to delete all presets at once.

1. From Configure menu, use **UP/DOWN** buttons to highlight DELETE PRESET selection then press **ENTER** button.
2. Delete Presets confirmation screen is displayed.
3. Use **UP/DOWN** buttons to select YES or NO selection.
4. Press **ENTER** button to accept selection and exit to Configure menu.

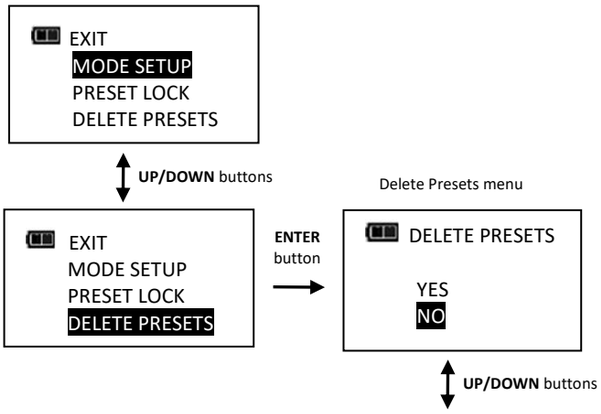

Note: If Delete Presets is selected without a Preset configured, following screen is displayed:

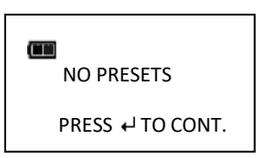

Job Mode

Job Mode function allows user to enable or disable wrench preset Job mode. When in Job mode, wrench executes presets in order configured and automatically switches to next preset when batch count reaches zero. Wrench is locked and Preset lock icon is displayed when Job mode is enabled.

Note: Password entry is required to enable Job Mode. When enabled, password entry is required to re-enter Configure menu (refer to ControlTech™ Calibration manual for default password).

1. From Configure menu, use **UP/DOWN** buttons to highlight JOB MODE selection then press **ENTER** button.
2. Job Mode enable/disable screen is displayed.
3. Use **UP/DOWN** buttons to select ENABLE or DISABLE.
4. Press **ENTER** button to accept selection and exit to Configure menu.

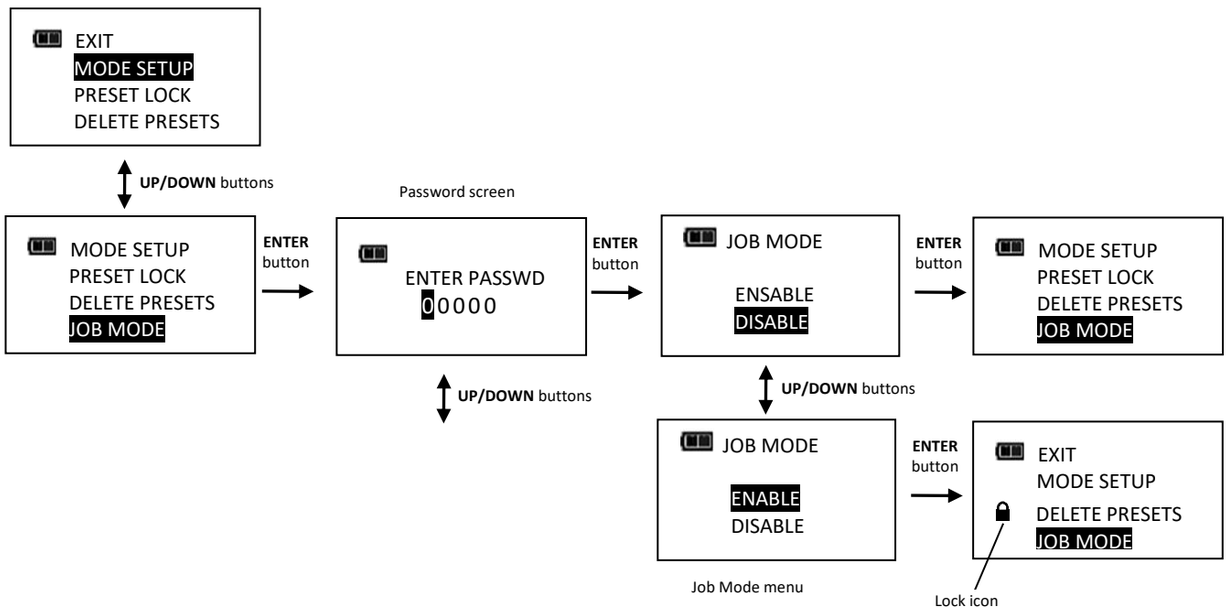

Note: Text "JOB" is displayed between PSET number and batch count when enabled.



Calibration

Calibration menu is password protected. Refer to *ControlTech™ Calibration manual*.



Setting Date and Time

Set Date/Time function allows user to set real-time-clock date and time for time stamping data records, recording last calibration date and notifying user of an expired calibration interval.

Note: When date and time is set for first time, In-Service date is also set and is used for calculating initial calibration interval (see "Setting Calibration Interval" in Advanced Configuration section).

1. From Configure menu, use **UP/DOWN** buttons to highlight SET DATE/TIME selection then press **ENTER** button.
2. SET DATE screen is displayed with year highlighted.
3. Use **UP/DOWN** buttons to set year then press **ENTER** button to highlight month.
4. Use **UP/DOWN** buttons to set month then press **ENTER** button to highlight day.
5. Use **UP/DOWN** buttons to set day then press **ENTER** button.

6. SET TIME screen is displayed with hour highlighted.
7. Use **UP/DOWN** buttons to set hour then press **ENTER** button to highlight minutes.
8. Use **UP/DOWN** buttons to set minutes then press **ENTER** button to highlight seconds.
9. Use **UP/DOWN** buttons to set seconds then press **ENTER** button.
10. Clock is set and Configure menu is displayed.

Note: Year selection will scroll up from 2014. Month selection will scroll from 1 to 12. Day selection will scroll from 1 to 31.

Note: Hour selection will scroll through 0 to 23. Minute and Second selections will scroll through 0 to 59.

Note: If batteries are removed from wrench for longer than 20 minutes, clock will revert to default settings and must be re-entered at power on.

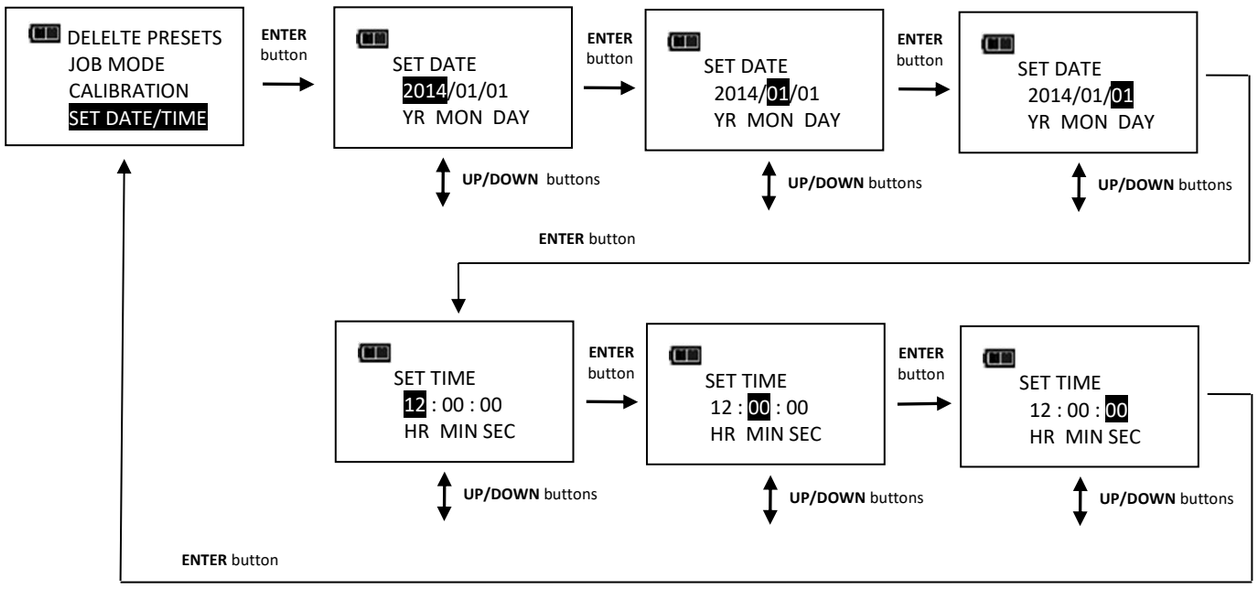

Setting Calibration Interval

This function will allow user to set calibration interval for when "CAL NEEDED" message will be displayed.

1. From Configure menu, use **UP/DOWN** buttons to highlight SET CAL INTRVAL selection then press **ENTER** button.
2. CAL INTERVAL screen is displayed.
3. Use **UP/DOWN** buttons to change calibration interval.

   Selectable Intervals:
   - 12 MON (factory default)
   - 6 MON
   - 3 MON
   - DISABLED
4. Press **ENTER** button to accept selection and exit to Configure menu.

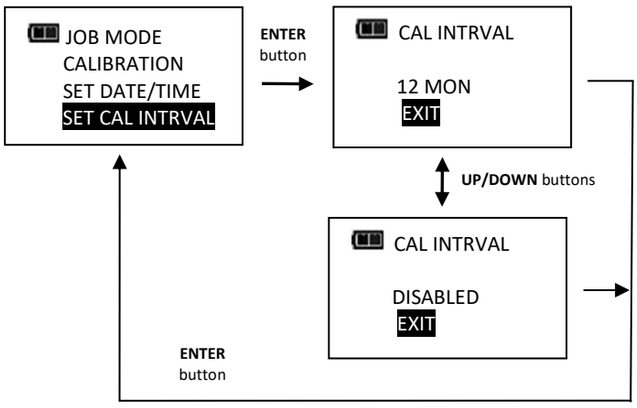

Note: Clock Date and Time must be set before calibration interval will function. If batteries are removed from wrench for longer than 20 minutes, clock will revert to default settings and must be re-entered at power on.

*Note: Calibration interval is calculated from either IN-Service Date or last Calibration date (see SHOW INFO menu) depending on which is more recent date. When clock Date is greater than IN-Service or Last Calibration date, plus Cal Interval, "CAL NEEDED" message will be displayed on power up and after a re-zero. Pressing **ENTER** button will continue to target menu. Applying torque while "CAL NEEDED" message is displayed will immediately display torque or angle measurement and return to target menu when released.*

Note: As an alternative to calibration interval, a Calibration Cycle Counter is provided in Calibration menu (Refer to ControlTech™ Calibration manual regarding Calibration menu). Each time a measurement cycle reaches target torque, calibration cycle counter is incremented. When torque is recalibrated, calibration counter is automatically reset to zero. User can disable calibration interval check and use number of cycles since last calibration to decide when to recalibrate.

Note: If an invalid date is entered and Calibration interval is enabled, an unintended "CAL NEEDED" message may be displayed. Either disable calibration interval or enter a correct date.

Change Password

Change Password function allows user to change password to a new password. Default password is required to initially change password. Refer to ControlTech™ Calibration Manual for default password.

1. From Configure menu, use **UP/DOWN** buttons to highlight CHANGE PASSWD selection then press **ENTER** button.
2. Initial password entry screen is displayed.
3. Enter default password if changing for first time, otherwise enter current user password using **UP/DOWN** buttons to change each digit followed by **ENTER** button.
4. Change password entry screen is displayed.
5. Enter new password using **UP/DOWN** buttons to change each digit followed by **ENTER** button.
6. Confirm password entry screen is displayed.
7. Re-enter new password using **UP/DOWN** buttons to change each digit followed by **ENTER** button.

*Note: Pressing **POWER** button at any time aborts password change sequence.*

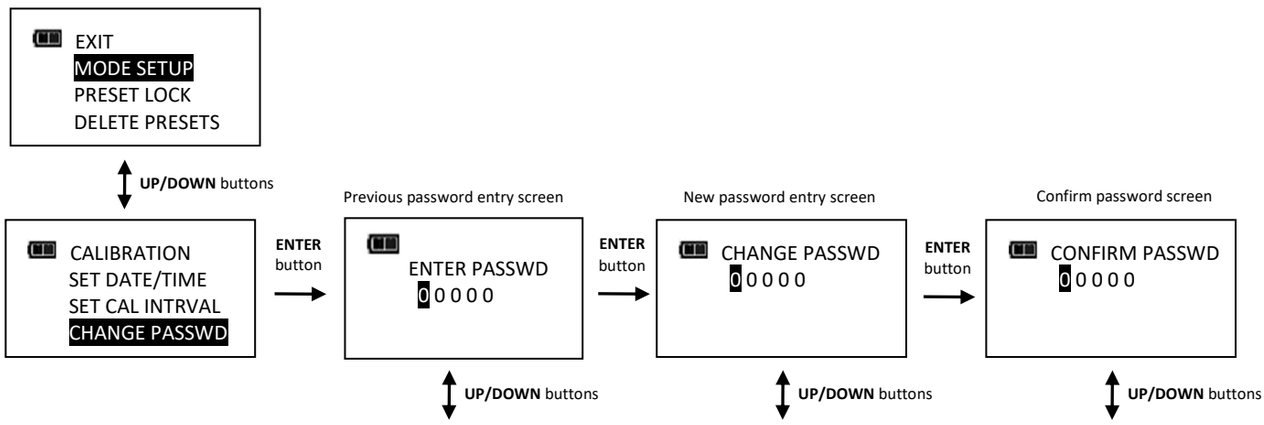

Note: If an invalid password is entered during confirmation step, Invalid Password Match screen is displayed and new password is not accepted.

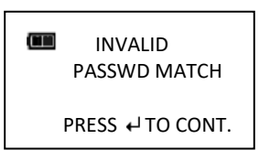

Control Box / ControlTechManager Report Mode Instrument Behavior

Set Headlength Behavior

1. When switching the Control Box from Control Mode to **Report Mode** power off instrument.
2. Change the Set Headlength Unit on the Control Box and or the ControlTechManager Qualifier Menu to inches.
3. Power down Control Box.
4. Power on instrument.
5. Enter SET HEADLENGTH menu on instrument (see page 6). Press UP/DOWN buttons simultaneously to set factory default calibrated length. (J-Shank instrument will read 2.500 in).
6. Power on Control Box.
7. When executing PSETS from Control Box when using interchangeable head style instruments with Snap-on "A" suffix torque adapters the PSET Headlength must be entered as 0 (zero) on the Control Box Preset Headlength field the save the change. The Control Box interprets 0 as the default calibrated length on J, Y, X and Z shank Interchangeable Heads Instruments.
8. The Control Box Preset Set Headlength field will round down due to the Control Box native headlength units are milometers. Example a J-shank instrument has a default calibrated length of 2.500 inches. The Control Box will round down to 2.499 inches and will be viewed as such on the Control Box Preset Set Headlength field after step 7 is performed.
9. When adding a crows-foot adapters or any other adapter type to an interchangeable head instrument that already has Snap-on "A" suffix adapter attached, the total combined effective length of the crows-foot adapter and Snap-on "A" J, Y, X and Z adapters must be on the instrument SET HEADLENGTH menu and or Control Box Control Box Preset Set Headlength field. **See example in Figure 2 (head / offset reference).**
10. Standard ratcheting head instruments the set headlength calibration default is always 0 (zero) regardless of the torque range or ratchet drive size. Only a crows-foot adapter effective length needs to be inputted. **See example in Figure 3 (offset reference).**

Table 1

Instrument Shank Size	Default Calibration Length On Instrument	Control Box Default Preset Set Headlength Field
J	2.500 inches	2.499 inches
Y	3.000 inches	2.999 inches
X	4.500 inches	4.499 inches
Z	5.750 inches	5.749 inches

Figure 2

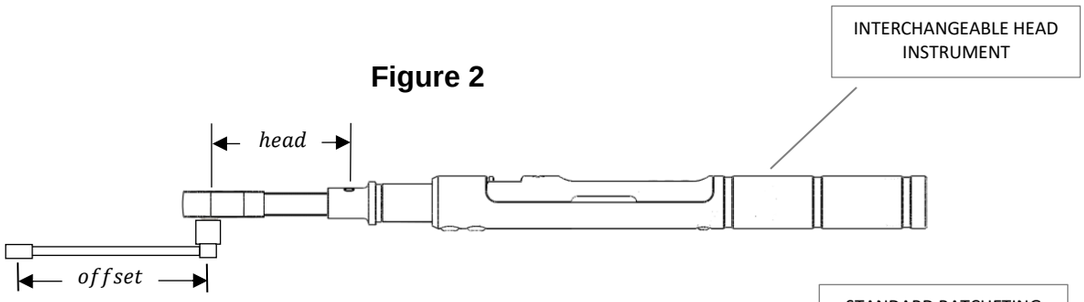

Figure 3

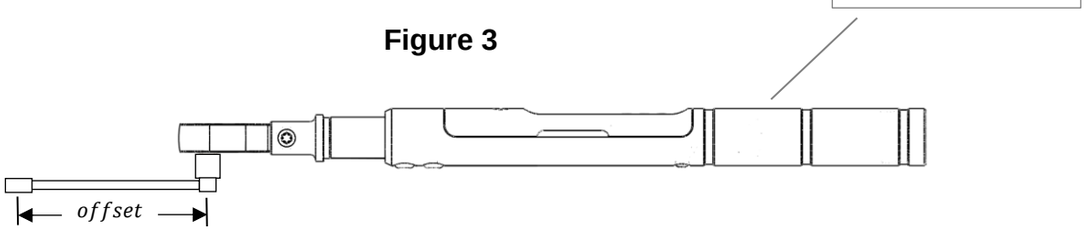

Control Box / ControlTechManager Control Mode Instrument Behavior

Set Headlength Behavior

1. Change the Set Headlength Unit on the Control Box and or the ControlTechManager Qualifier Menu to inches.
2. When in Control Mode executing Parameters from the PC ControlTechManager or Control Box when using interchangeable head style instruments with a Snap-on “A” suffix torque adapters, the Parameter Headlength field is shown as 0 (zero). The Control Box interprets 0 (zero) as the default calibrated length on J, Y, X and Z shank Interchangeable Heads Instruments.
3. When adding a crows-foot adapters or any other adapter type to an interchangeable head instrument that already has Snap-on “A” suffix adapter attached, the total combined effective length of crows-foot adapter and Snap-on “A” J, Y, X and Z adapters must be inputted on the Parameter Control Box and or PC ControlTechManager SET HEADLENGTH field.
4. When in Control Mode there is no rounding effect on the Control Box or ControlTechManager Set Headlength Fields. **See example in Figure 2 (head / offset reference).**
5. Standard ratcheting head instruments the set headlength calibration default is always 0 (zero) regardless of the torque range or ratchet drive size. Only a crows-foot adapter effective length needs to be inputted. **See example in Figure 3 (offset reference).**

Table 2

Instrument Shank Size	Default Calibration Length On Instrument	Control Box Parameter Default Set Headlength Field
J	2.500 inches	0 inches
Y	3.000 inches	0 inches
X	4.500 inches	0 inches
Z	5.750 inches	0 inches

Figure 2

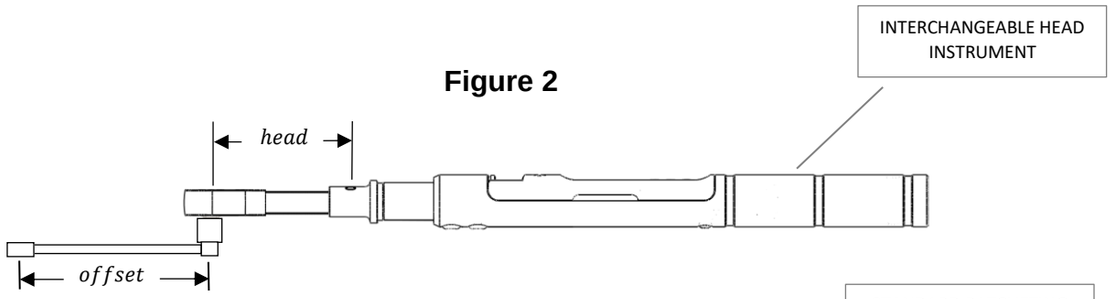

Figure 3

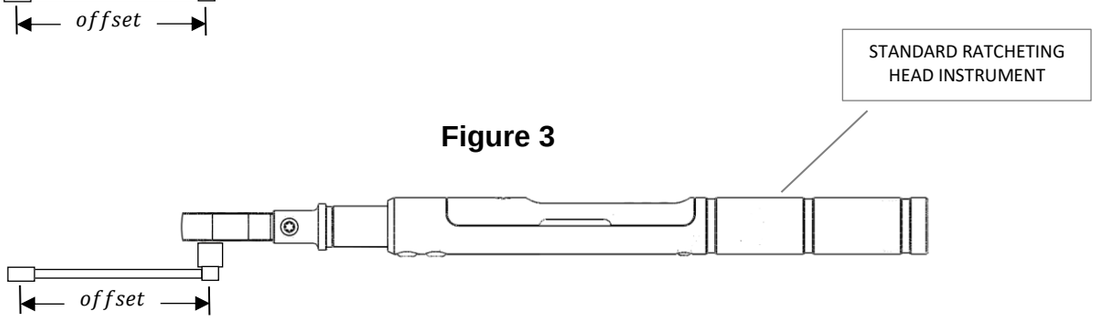

- Troubleshooting

Note: If any of following issues persist, return wrench to an authorized Snap-on repair center.

Issue	Possible Cause	Resolution
Wrench does not turn on when POWER button pressed.	Dead/No batteries	Replace batteries
	Software glitch	Cycle power using end-cap
Torque reading out of spec.	Calibration required	Recalibrate
	Incorrect head length entered	Enter correct offset head length
Wrench did not retain settings while batteries were removed.	Batteries removed before setting were saved in non-volatile memory.	Clear data, re-enter settings and press and hold POWER button to power down wrench before removing batteries.
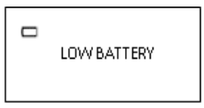	Low battery	Press ENTER button to continue using wrench and replace batteries soon.
	Dead battery	Press POWER button to turn off wrench and replace batteries.
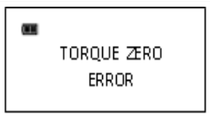	Torque applied while zeroing	Remove torque and re-zero
	Wrench over torqued	Recalibrate
	Wrench improperly calibrated	Recalibrate
	Torque sensor failure	Return to Factory
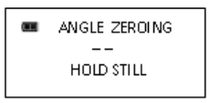	Wrench moving during zeroing	Place wrench on stable surface
	Gyro unstable	Return to Factory
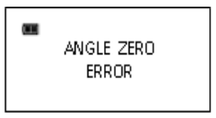	ENTER button pressed during angle zeroing (Aborted zeroing to access menus)	Press POWER button to re-zero
	Over 125% of full scale torque applied	Cycle power using POWER button and recalibrate
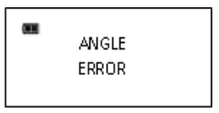	Wrench rotated too fast during angle measurement	Press POWER button to re-zero
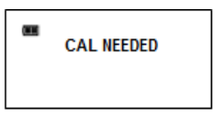	Calibration interval exceeded or invalid date entered with calibration interval enabled	Calibrate wrench or press ENTER to continue. Disable calibration interval if not required.
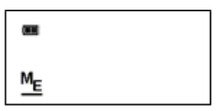	Memory error	Clear data memory
	Torque uncalibrated	Calibrate torque
	Angle uncalibrated	Calibrate angle

• USE OF ADAPTORS, EXTENSIONS AND UNIVERSALS

Anytime an adaptor, extension or universal is used with a torque wrench in such a way that fastener distance is different than torque wrench square drive distance at calibration, an adjustment to head length is required to get a proper fastener torque reading.

When using wobble extension or a universal, do not exceed more than 15 degrees of offset from perpendicular drive. Do not use a long extension with flex-drive at full flex.

• CALIBRATION

Contact your Snap-on sales representative for calibration services or refer to ControlTech™ Calibration Manual.

• CERTIFICATION

This torque-angle wrench was calibrated at factory using angular displacement and torque measurement instruments that are traceable to National Institute of Standards and Technology (N.I.S.T.). Torque parameters comply with ISO 6789:2003 and ASME B107:300-2010 (B107.29). Note: no U.S. or International Standards exist for angle wrenches.

IMPORTANT!	Calibration events are recorded in wrench memory which provides evidence to void factory certification.

• MAINTENANCE / SERVICE

Clean wrench by wiping with a damp cloth. DO NOT use solvents, thinners or carburetor cleaners. DO NOT immerse in anything.
Service and repairs are to be done by Snap-on Service Centers only. Contact your Snap-on Tools representative.
Ratchet head repair kits can be ordered from a Snap-on Representative.

NOTES: - If display shows persistent "**TORQUE ZERO ERROR**" at power on, wrench is damaged and must be returned for repair
- If display shows **“ANGLE ERROR”** in angle mode, fastener rotation speed has exceeded capacity of wrench.
- Wrench must be held still during angle zeroing. Motion is indicated by alternating dashes **“- -”** on display
- Remove battery when stored for extended periods (Note: clock will revert to default settings).

- Battery Replacement

Note: When replacing batteries, real-time-clock will maintain date and time for 20 minutes.

Note: Turn End Cap clockwise to unscrew.

Replace 240 models with three "AAA" cells only.

Batteries should be installed in carrier prior to carrier installation into wrench.
Battery negative contacts should be oriented with carrier springs.

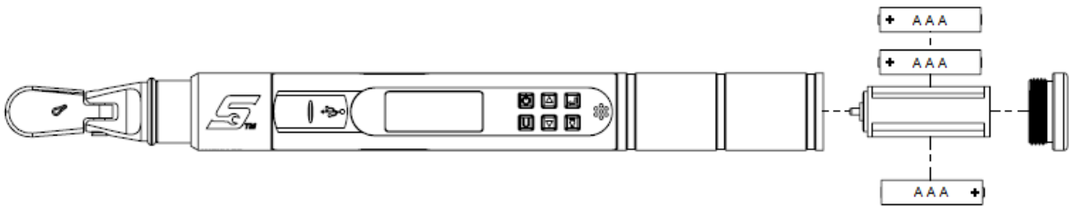

Replace all other models with three "AA" cells only.

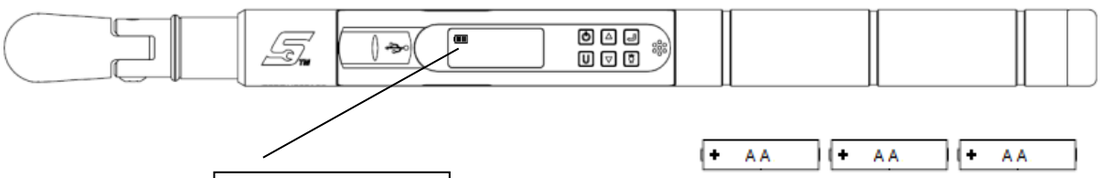

UNSCREW END CAP
INSERT NEW CELLS
POSITIVE (+) END
INTO HANDLE FIRST

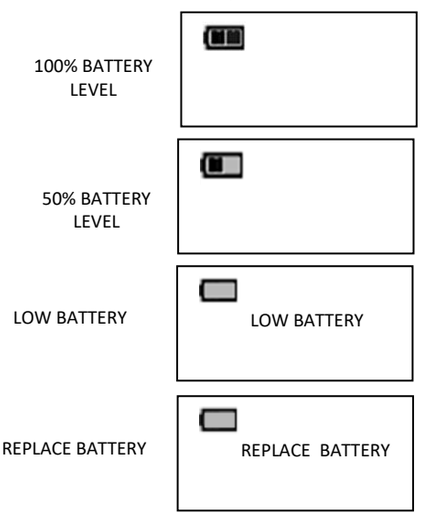

*Note: When Replace Battery screen is displayed wrench will no longer operate until batteries are replaced. Only **POWER** button functions which immediately turns off wrench.*

- Memory Indicators

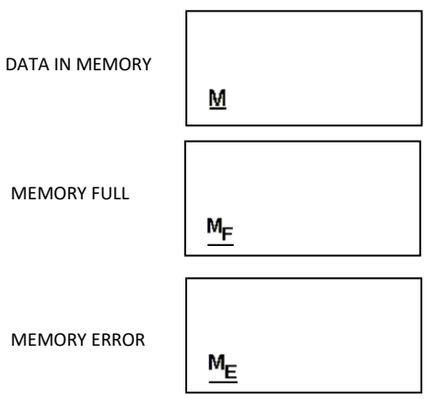

Less than 1500 torque and angle records stored in memory.

1500 torque or angle records stored in memory. New records will not be recorded until memory is cleared.

Memory read or write error.

This page intentionally left blank

Snap-on Tools Company

EC Declaration of Conformity

The undersigned representing the following supplier:

Snap-On Specialty Tools
19220 San Jose Ave.
City of Industry, CA 91748
USA

Herewith declare that the Products:

Brand:	Snap-on
Series:	ControlTech® Link Wireless Wrench
Models:	CTLNK1J240 CTLNK1R240 CTLNK2R100 CTLNK2Y100 CTLNK2Y125 CTLNK3R250 CTLNK3X250 CTLNK4R600 CTLNK4Z600

These products are in conformity with the provisions of the following EC directives (and their amendments) when installed in accordance with the installation instructions contained in the product documentation.

2014/30/EU	- EMC Directive
2014/35/EU	- Low Voltage Directive (LVD)
2014/53/EU	- Radio Equipment Directive (RED)
2011/65/EU	- Restriction of certain hazardous substances (RoHS)
2012/19/EU	- Waste electrical and electronic equipment (WEEE)

And that the standards referenced below have been applied:

EN 61326-1:2013	Electrical Measurement, Control and Laboratory Equipment, EMC requirement Part 1 - General Requirement
EN 55011:2016 + A11:2020	Industrial, scientific and medical equipment. Radio-frequency disturbance characteristics. Limits and methods of measurement - Radiated Emissions
EN 61000-4-2:2009	Electromagnetic compatibility (EMC) - Part 4-2: Testing and measurement techniques – Electrostatic discharge immunity test
EN IEC 61000-4-3:2020	Electromagnetic compatibility (EMC) - Part 4-3: Testing and measurement techniques – Radiated, radio-frequency, electromagnetic field immunity test
EN 61000-4-8:2010	Electromagnetic compatibility (EMC) - Part 4-8: Testing and measurement techniques – Power frequency magnetic field immunity test
EN IEC 63000:2018	Technical documentation for the assessment of electrical and electronic products with respect to the restriction of hazardous substances
EN 61010-1: 2010+A1:2019	Safety requirements for electrical equipment for measurement, control, and laboratory use - Part 1: General requirements
ETSI EN 300 328 V2.2.2 (2019-07)	Wideband transmission systems; Data transmission equipment operating in the 2.4 GHZ ISM band
ETSI EN 301 489-1 V2.2.3 (2019-11)	Electromagnetic compatibility (EMC) standard for radio equipment and services; Part 1: Common technical requirements

Year of CE marking: 2021

Company Authorized to Compile the Technical File:
Snap-on Tools Company
2801 80th Street
Kenosha, WI 53141-1410, USA

Authorized Representative within the European Union (EU) is:
Francesco Frezza
Snap-on Equipment
Via Prov. Carpi, 33
42015 Correggio RE
Italy

Signature: _____

Director, Engineering: Nathan Lee
Snap-on Specialty Tools
19220 San Jose Avenue
City of Industry, CA 91748
November 2021

Snap-on Tools Company

UK Declaration of Conformity

The undersigned representing the following supplier:

Snap-on Specialty Tools
19220 San Jose Ave.
City of Industry, CA 91748
USA

Herewith declare that the Products:

Brand:	Snap-on
Series:	ControlTech® Link Wireless Wrench
Models:	CTLNK1J240 CTLNK1R240 CTLNK2R100 CTLNK2Y100 CTLNK2Y125 CTLNK3R250 CTLNK3X250 CTLNK4R600 CTLNK4Z600

These products are in conformity with the provisions of the following UK Statutory Instruments (and their amendments) when installed in accordance with the installation instructions contained in the product documentation.

2016 No. 1091	The Electromagnetic Compatibility Regulations 2016
2016 No. 1101	The Electrical Equipment (Safety) Regulations 2016
2017 No. 1206	The Radio Equipment Regulations 2017
2012 No. 3032	The Restriction of the Use of Certain Hazardous Substances in Electrical and Electronic Equipment Regulations 2012
2013 No. 3113	The Waste Electrical and Electronic Equipment Regulations 2013

And that the standards referenced below have been applied:

BS EN 61326-1:2013	Electrical Measurement, Control and Laboratory Equipment, EMC requirement Part 1 - General Requirement
BS EN 55011:2016 + A11:2020	Industrial, scientific and medical equipment. Radio-frequency disturbance characteristics. Limits and methods of measurement - Radiated Emissions
BS EN 61000-4-2:2009	Electromagnetic compatibility (EMC) - Part 4-2: Testing and measurement techniques – Electrostatic discharge immunity test
BS EN IEC 61000-4-3:2020	Electromagnetic compatibility (EMC) - Part 4-3: Testing and measurement techniques – Radiated, radio-frequency, electromagnetic field immunity test
BS EN 61000-4-8:2010	Electromagnetic compatibility (EMC) – Part 4-8: Testing and measurement techniques – Power frequency magnetic field immunity test
BS EN IEC 63000:2018	Technical documentation for the assessment of electrical and electronic products with respect to the restriction of hazardous substances
BS EN 61010-1: 2010+A1:2019	Safety requirements for electrical equipment for measurement, control, and laboratory use - Part 1: General requirements
BS ETSI EN 300 328 V2.2.2 (2019-07)	Wideband transmission systems; Data transmission equipment operating in the 2.4 GHZ ISM band
BS ETSI EN 301 489-1 V2.2.3 (2019-11)	Electromagnetic compatibility (EMC) standard for radio equipment and services; Part 1: Common technical requirements

Year of UKCA marking: 2021

Company Authorized to Compile the Technical File:
Snap-on Tools Company
2801 80th Street
Kenosha, WI 53141-1410, USA

Authorized Representative within the United Kingdom (UK) is:
Matthew Law
Snap-on Tools LTD.
Telford Way Industrial Estate
Kettering, Northants
NN16 8SN
United Kingdom

Signature: _____

Director, Engineering: Nathan Lee
Snap-on Specialty Tools
19220 San Jose Avenue
City of Industry, CA 91748
November 2021

AUTHORIZED SNAP-ON REPAIR CENTERS

USA

Eastern Repair Center
6320 Flank Drive
Harrisburg, PA 17112
Phone: 717-652-7914
Fax: 717-652-7123

Northern Repair Center
3011 E. State Rt. 176, Dock A
Crystal Lake, Il 60014
Phone: 815-479-6850
Fax: 815-479-6857

Western Repair Center
3602 Challenger Way
Carson City, NV 89706-0753
Phone: 775-883-8585
Fax: 775-883-8590

CANADA

Western Repair Centre
7403-48 Street SE
Calgary, Alberta
Canada, T2C-4H6
Phone: 403-720-0525
Fax: 403-720-0524

INTERNATIONAL

United Kingdom Repair Center
Telford Way
Telford Way Industrial Estate
Kettering, Northants
NN16 8UN England
Phone: 44-1-536-413855
Fax: 44-1-536-413900

Australia Repair Centre
Snap-on Tools Australia PTY.LTD
80 Holbeche Road
Arndell Park NSW 2148
Australia
Phone: 61-2-9837-9155
Fax: 61-2-9837-9192

Singapore Repair Center
Snap-on Tools Singapore Pte Ltd
25 Tagore Lane, #01-01,
Singapore, 787602
Phone: 65-64515570
Fax: 65-64515574

Japan Repair Center
Snap-on Tools Japan K.K.
2-1-6 Shinkiba
Koto-ku, Tokyo 136-0082
Japan
Phone: 81-3-5463-1280
Fax: 81-3-5463-1284

Snap-on/SUN De Mexico
S.A. De C.V.
Avenida Presidente Juarez No. 2016
Col Los Reyes Zona Industrial
Tlalnepantla Edo De Mexico
CP54070 MEXICO
Phone: 52-55-53903122
Fax: 52-55-53903259

China Repair Center:
Snap-on Asia Manufacturing (Kunshan) Co. Ltd.
500 Tong Feng Road East
Kunshan, Jiangsu 215300, China.
Phone: 86-51257708282 ext. 2068

Korea Repair Center:
Snap-on Tools Korea
#201-205, Sambo Techno Tower 122
Jomaru-ro 385beon-gil,
Bucheon, Gyeonggi-do
Republic of Korea 14556.
Phone: 82-323267310
Fax: 82-323267312

India Repair Center:
Snap-on Tools Private Limited
Gat No 2328, Ganga Retreat Club Road
Off Nagar Road
Wagholi, Pune - 413207
India.

IMPORTANT ENVIRONMENTAL NOTES:

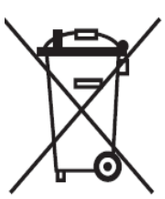

1. THIS EQUIPMENT MAY CONTAIN HAZARDOUS MATERIALS WHICH CAN BE HARMFUL TO THE ENVIRONMENT.
2. DO NOT DISPOSE OF THIS EQUIPMENT AS MUNICIPAL WASTE. RETURN IT TO DISTRIBUTOR OR A DESIGNATED COLLECTION CENTER

THANK YOU FOR CARING ABOUT OUR ENVIRONMENT!

Snap-on Tools Company
Kenosha, WI 53141-1410 USA





Printed in USA
21-11

20-3104-SO REV. B